CATFORD ENGINEERING PRODUCTS

Jamestown
SA 5491

All Prices Excluding GST

Phone: 0418 641 566

www.catford.com.au sales@catford.com.au

Gear Pumps, Motors & Flow Dividers

*Group 1, 2 & 3 Pumps *Log Splitter Pumps
*Group 1, 2 & 3 Gear Motors *Gear Flow Dividers

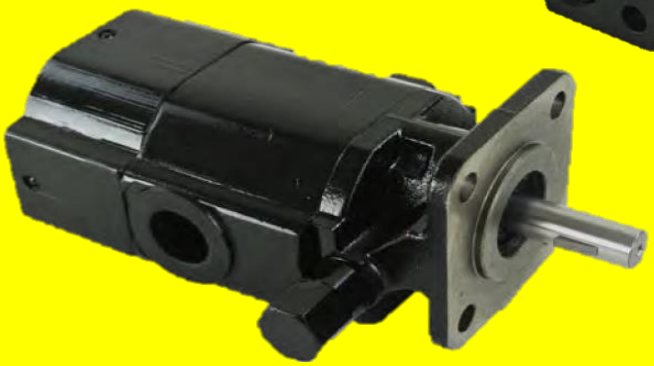

Lot 25, Mannanarie Road, Jamestown, South Australia 5491

PO Box 178, Jamestown, South Australia 5491

0418 641 566

sales@catford.com.au

Due to fluctuations in the Australian dollar and the economic climate, please be advised that all prices are subject to change.
Please contact us to confirm pricing.

All prices stated within are exclusive of GST
(All prices are correct as of January 1st 2021, but Catford Engineering reserve the right to change these prices without notice)

Gear Pumps, Motors & Flow Dividers

CATFORD ENGINEERING PRODUCTS

Jamestown
SA 5491

Phone: 0418 641 566
www.catford.com.au sales@catford.com.au

Vivoil Group 0 Pumps 118

Vivoil Group 1 Pumps 120

Vivoil Group 2 Pumps 124

Vivoil Group 3 Pumps 130

Multiple Pump Nomenclature 134

Group 1 Pumps 136

Group 2 Pumps 137

Group 3 Pumps 139

Log Splitter Pumps 141

Vivoil Group 1 Gear Motors 142

Vivoil Group 2 Gear Motors 145

Vivoil Group 3 Gear Motors 148

Vivoil Gear Flow Dividers 152

Gear Flow Dividers 154

PREMIUM ITALIAN PRODUCT

ORDER CODE FOR VIVOIL GROUP 0 PUMPS

Series	Group	Pump	Displace-ment	Flange	Shaft	Inlet Port	Outlet Port	Rear Cover
X	0	P	05	02	A	B	B	A

Displacement	
0.17cc	01
0.25cc	02
0.45cc	04
0.57cc	05
0.76cc	06
0.98cc	07
1.27cc	09
1.52cc	11
2.30cc	13

Flange	
LEFT ROTATION 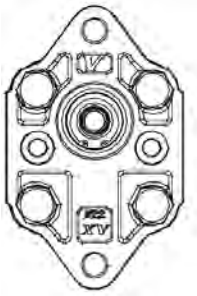	01
RIGHT ROTATION	02

Shaft	
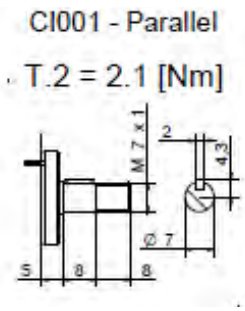 *Parallel Ø 7mm M7x1 - Key 2mm*	A

Rear Cover	
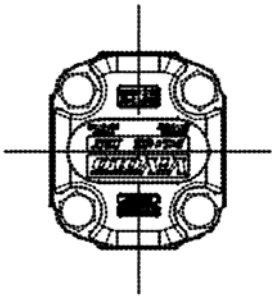	A

Ports	Inlet	Outlet
0.17cc	B	B
0.25cc	B	B
0.45cc	B	B
0.57cc	B	B
0.76cc	B	B
0.98cc	B	B
1.27cc	B	B
1.52cc	B	B
2.30cc	B	B
B = 1/4” BSPP		

Group 0 DIN Mount, M7x1 keyed shaft

Part Number	List Price $	CC	Max Pressure bar Working	Max Pressure bar Peak	Max/Min Speed	Port S	Port P	A mm	B mm	C mm
X0P0102ABBA	**336.00**	0.17	220	260	700/9000	1/4" BSPP	1/4" BSPP	55.8	26.2	46.8
X0P0202ABBA	**336.00**	0.25						56.4	26.5	47.4
X0P0402ABBA	**336.00**	0.45		280				58.0	27.3	49.0
X0P0502ABBA	**336.00**	0.57						59.0	27.8	50.0
X0P0602ABBA	**336.00**	0.76						60.5	28.5	51.5
X0P0702ABBA	**336.00**	0.98			700/6000			62.0	29.3	53.0
X0P0902ABBA	**371.00**	1.27						64.5	30.5	55.5
X0P1102ABBA	**371.00**	1.52						66.5	31.5	57.5
X0P1302ABBA	**371.00**	2.30	190	210	700/5000			72.5	34.5	63.5

Seal Kit

Part Number	List Price $	Material
8KGX0P1.A	**41.00**	NBR

Available as standard rotation CW or CCW

Compatible with Group 0, 1, 2, 3 tandem pumps

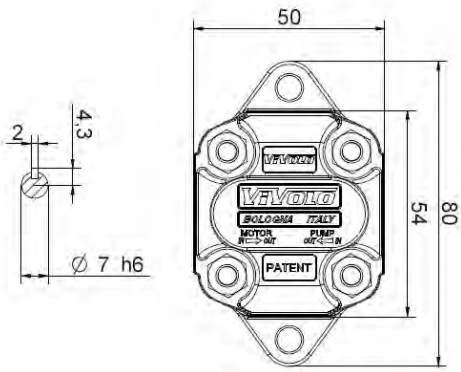

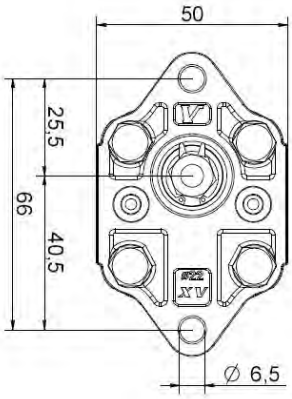

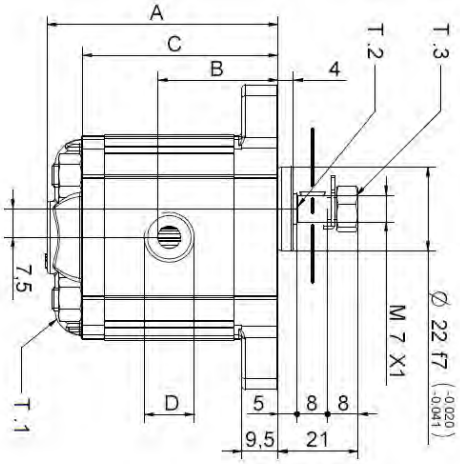

ORDER CODE FOR VIVOIL GROUP 1 PUMPS

Note: Additional costs apply for non-standard options

Series	Group	Pump	Displace-ment	Flange	Shaft	Inlet Port	Outlet Port	Rear Cover
X	1	P	27	01	F	B	B	A

Displacement	
0.9cc	16
1.2cc	17
1.7cc	18
2.2cc	20
2.6cc	21
3.2cc	23
3.8cc	25
4.3cc	27
4.9cc	29
5.9cc	31
6.5cc	32
7.8cc	34
9.8cc	36

Shaft	
CO001 - Tapered T.2 = 43 [Nm] 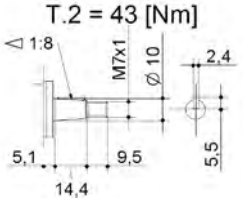 *Tapered 1:8 Ø 10mm - M7x1* *Key 2.4mm*	F
CI002 - Parallel T.2 = 32.8 [Nm] *Parallel Ø 1/2" - Key 3.2mm*	B

Flange	
LEFT ROTATION	
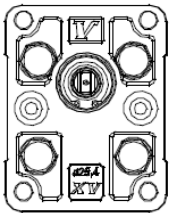 *DIN Group 1*	01
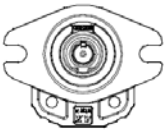 *SAE-AA*	61
RIGHT ROTATION	
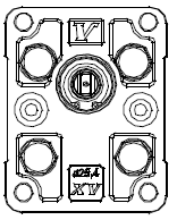 *DIN Group 1*	02
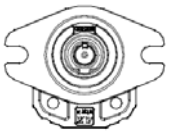 *SAE-AA*	62

Ports	Inlet	Outlet
0.9cc	B	B
1.2cc	B	B
1.7cc	B	B
2.2cc	B	B
2.6cc	B	B
3.2cc	B	B
3.8cc	B	B
4.3cc	B	B
4.9cc	B	B
5.9cc	B	B
6.5cc	B	B
7.8cc	B	B
9.8cc	B	B
B = 3/8" BSPP		

Rear Cover	
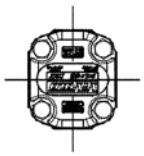	A
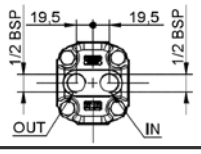	D
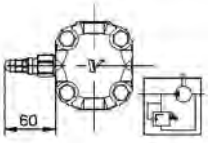 *(WITH RELIEF VALVE)*	N01 10-105 bar N02 70-210 bar N03 140-350 bar

RELIEF VALVE PRICING - PAGE 121

NEW Group 1 Rear Cover With Integrated Relief Valve

Order Code	List Price $	Relief Range		Max Flow Rate
		Min	Max	
N-01	255.00	10 bar	105 bar	50 lpm
N-02	255.00	70 bar	210 bar	
N-03	255.00	140 bar	350 bar	

Note: Pricing for rear cover with integrated relief valve is <u>in addition</u> to standard pump price

Group 1 DIN Mount, 1:8 Tapered Shaft

Part Number	List Price $	CC	Max Pressure bar Working	Max Pressure bar Peak	Max/Min Speed	Port S	Port P	A	B mm	C
X1P1602FBBA	**366.00**	0.9	240	280	6000/700	3/8" BSPP	3/8" BSPP	78.1	37.3	66.1
X1P1702FBBA	**366.00**	1.2	250	290				79.0	37.8	67.0
X1P1802FBBA	**366.00**	1.7						80.5	38.5	68.5
X1P2002FBBA	**366.00**	2.2						82.5	39.5	70.5
X1P2102FBBA	**366.00**	2.6		300				84.5	40.5	72.5
X1P2302FBBA	**366.00**	3.2						86.5	41.5	74.5
X1P2502FBBA	**366.00**	3.8						88.5	42.5	76.5
X1P2702FBBA	**366.00**	4.3						90.5	43.5	78.5
X1P2902FBBA	**391.00**	4.9						93.5	45.0	81.5
X1P3102FBBA	**391.00**	5.9			5000/700			97.0	46.8	85.0
X1P3202FBBA	**391.00**	6.5						98.5	48.0	86.5
X1P3402FBBA	**391.00**	7.8	220	260				103.5	50.0	91.5
X1P3602FBBA	**391.00**	9.8	190	230	4000/700			112.5	54.5	100.5

Available as standard rotation CW or CCW

Also available - relief valve option, tandem pumps

Available with SAE A-2 bolt with keyed shaft

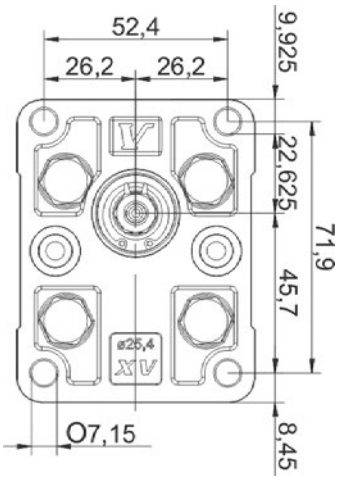

Seal Kit

Part Number	List Price $	Material
8KGX1P1.A	**36.00**	NBR
8KGX1P1.V	**113.00**	Viton

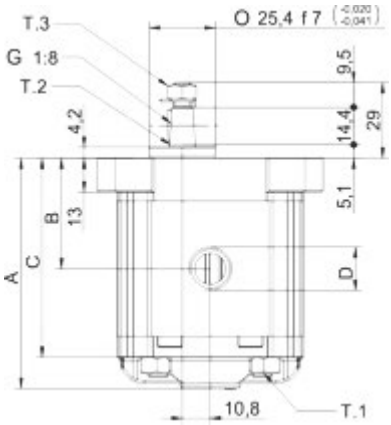

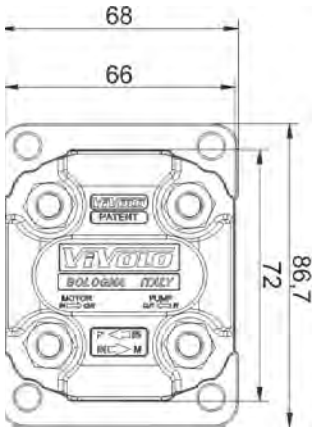

Group 1 SAE AA Mount, 1/2" Keyed Shaft

Part Number	List Price $	CC	Max Pressure bar Working	Max Pressure bar Peak	Max/Min Speed	Port S	Port P	A	B mm	C
X1P1662BBBA	**366.00**	0.9	240	280	6000/700	3/8" BSPP	3/8" BSPP	82.6	41.8	70.6
X1P1762BBBA	**366.00**	1.2	250	290				83.5	42.3	71.5
X1P1862BBBA	**366.00**	1.7						85.0	43.0	73.0
X1P2062BBBA	**366.00**	2.2						87.0	44.0	75.0
X1P2162BBBA	**366.00**	2.6		300				89.0	45.0	77.0
X1P2362BBBA	**366.00**	3.2						91.0	46.5	79.0
X1P2562BBBA	**366.00**	3.8						93.0	47.0	81.0
X1P2762BBBA	**366.00**	4.3						95.0	48.0	83.0
X1P2962BBBA	**391.00**	4.9						98.0	49.5	86.0
X1P3162BBBA	**391.00**	5.9			5000/700			101.5	51.3	89.5
X1P3262BBBA	**391.00**	6.5						105.0	52.5	93.0
X1P3462BBBA	**391.00**	7.8	220	260				108.0	54.5	96.0
X1P3662BBBA	**391.00**	9.8	190	230	4000/700			117.0	59.0	105.0

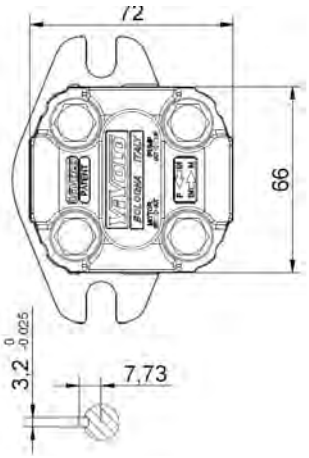

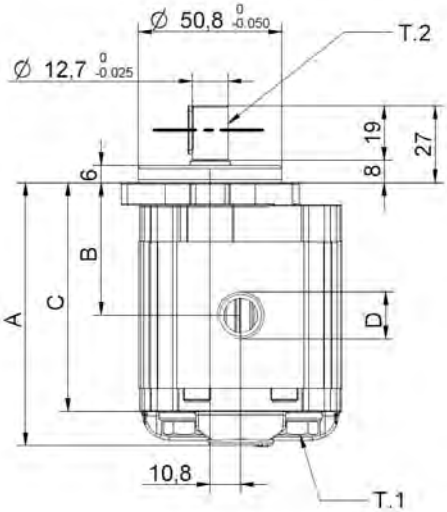

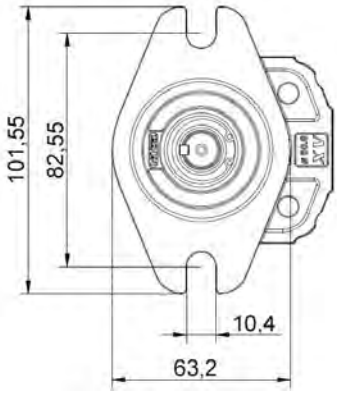

Seal Kit

Part Number	List Price $	Material
8KGX1P2.A	**36.00**	NBR
8KGX1P2.V	**129.00**	Viton

ORDER CODE FOR VIVOIL GROUP 2 PUMPS

Note: Additional costs apply for non-standard options

Series	Group	Pump	Displace-ment	Flange	Shaft	Inlet Port	Outlet Port	Rear Cover
X	2	P	51	02	E	C	B	A

Displacement	
4.2cc	41
6.0cc	43
8.4cc	45
10.8cc	47
14.4cc	49
16.8cc	51
19.2cc	53
22.8cc	55
26.2cc	57
30.0cc	59
34.2cc	61
39.6cc	63

Ports	Inlet	Outlet
4.2cc	B	B
6.0cc	B	B
8.4cc	C	B
10.8cc	C	B
14.4cc	C	B
16.8cc	D	C
19.2cc	D	C
22.8cc	D	C
26.2cc	D	C
30.0cc	D	C
34.2cc	D	C
39.6cc	D	C
B = 1/2" BSPP		
C = 3/4" BSPP		
D = 1" BSPP		

Flange

LEFT ROTATION		RIGHT ROTATION	
DIN Group 2	01	DIN Group 2	02
SAE-A	51	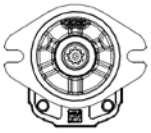 SAE-A	52
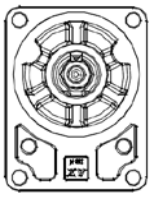 Ø80 German Standardized	41	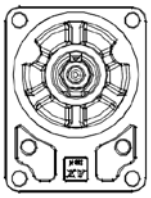 Ø80 German Standardized	42
Ø50 HY German Standardized	21	Ø50 HY German Standardized	22

Rear Cover

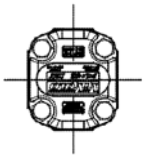

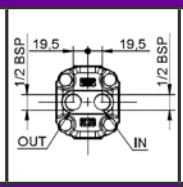

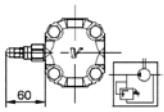

(WITH RELIEF VALVE)

A	D	N01 10-105 bar
		N02 70-210 bar
		N03 140-350 bar

RELIEF VALVES & PRIORITY HEADS - SEE PAGE 125

Shaft

C0002-Tapered T.2 = 233,2 Nm 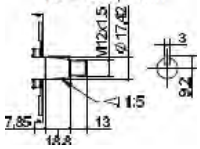 *Tapered 1:5 Ø 17.4mm* *M12x1.5 - Key 3mm* *GERMAN STANDARIZED ONLY*	F
C0001-Tapered T.2 = 233,2 Nm 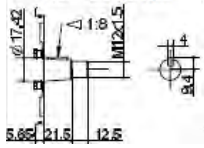 *Tapered 1:8 Ø 17.2mm* *M12x1.5 - Key 4mm*	E
CI001-Parallel T.2 = 44,1 Nm 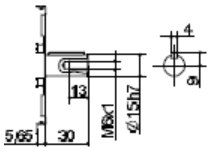 *Parallel Ø 15mm - Key 4mm*	A
CI002-Parallel T.2 = 67,5 Nm 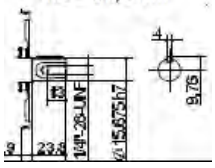 *Parallel Ø 5/8" - Key 4mm*	B
SCF04-Splined T.2 = 104,6 Nm 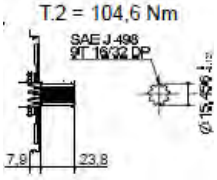 *Splined 9t 16/32 DP*	I

10 & 11 TOOTH SHAFT AVAILABLE SEE PAGE 129

NEW Group 2 Rear Cover With Integrated Relief Valve

Order Code	List Price $	Flow Ajustment		Max Flow Rate
		Min	Max	
N-01	310.00	10 bar	105 bar	50 lpm
N-02	310.00	70 bar	210 bar	
N-03	310.00	140 bar	350 bar	

NOTE:
Pricing for rear covers with integrated relief valve and rear covers with priority head is <u>in addition</u> to standard pump price.

NEW Priority Head Internal Excess Flow

Rear Cover Part Number	List Price $	Flow Ajustment		QC Port
		Min	Max	
CB62	620.00	3 lpm	6 lpm	3/8"BSPP
CB58	620.00	6 lpm	11 lpm	
CB63	620.00	8 lpm	16 lpm	
CB64	620.00	13 lpm	25 lpm	
CB70	620.00	25 lpm	45 lpm	

CB Series

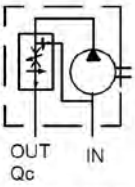

Qc = ADJUSTABLE CONSTANT FLOW

CA Series

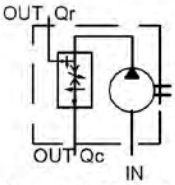

Qc = ADJUSTABLE CONSTANT FLOW
Qr = EXCEEDING FLOW

NEW Priority Head External Excess Flow

Rear Cover Part Number	List Price $	Flow Ajustment		QR Port	QC Port
		Min	Max		
CA62	640.00	3 lpm	6 lpm	3/8" BSPP	3/8" BSPP
CA58	640.00	6 lpm	11 lpm		
CA63	640.00	8 lpm	16 lpm		
CA64	640.00	13 lpm	25 lpm		
CA70	640.00	25 lpm	45 lpm		

Group 2 DIN Mount, 1:8 Tapered Shaft

Part Number	List Price $	CC	Max Pressure bar Working	Max Pressure bar Peak	Max/Min Speed	Port S	Port P	A	B mm	C
X2P4102EBBA	**489.00**	4.2	260	300	3500/700	1/2" BSPP	1/2" BSPP	87.2	41.7	77.2
X2P4302EBBA	**489.00**	6.0						90.2	43.2	80.2
X2P4502ECBA	**489.00**	8.4				3/4" BSPP		94.2	45.2	84.2
X2P4702ECBA	**490.00**	10.8						98.2	47.2	88.2
X2P4902ECBA	**505.00**	14.4	250	290				104.2	50.2	94.2
X2P5102EDCA	**505.00**	16.8	230	270		1" BSPP	3/4" BSPP	108.2	52.2	98.2
X2P5302EDCA	**515.00**	19.2	210	250	3000/700			112.2	54.2	102.2
X2P5502EDCA	**515.00**	22.8	200	240				118.2	57.2	108.2
X2P5702EDCA	**515.00**	26.2	170	210				122.2	59.2	112.2
X2P5902EDCA	**577.00**	30.0	160	200	2500/700			130.2	63.2	120.2
X2P6102EDCA	**577.00**	34.2	150	190				137.2	66.7	127.2
X2P6302EDCA	**577.00**	39.6	140	180	2000/700			146.2	71.2	136.2

Available as standard rotation CW or CCW

Also available - relief valve option, tandem pumps

Available with SAE A-2 bolt with keyed or spline shaft

Rear-ported available

Priority Heads now available, see page 125

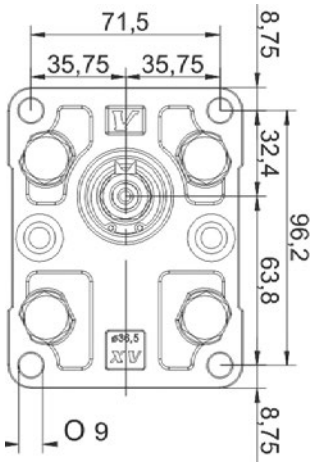

Seal Kit

Part Number	List Price $	Material
8KGX2P1.A	**68.00**	NBR
8KGX2P1.V	**139.00**	Viton

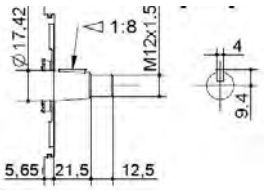

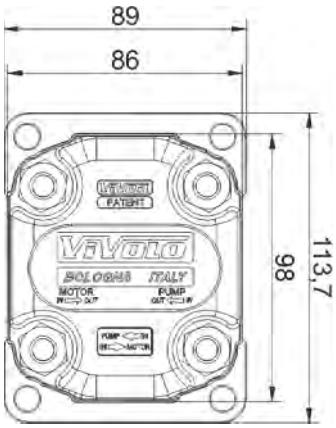

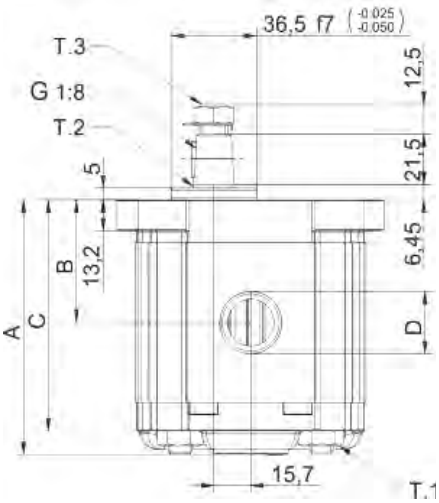

Group 2 Standard German Mount 1:5 Taper Shaft

Part Number	List Price $	CC	Max Pressure bar Working	Max Pressure bar Peak	Max/Min Speed	Port S	Port P	A	B mm	C
X2P4142FBBA	**592.00**	4.2	260	300	3500/700	1/2" BSPP	1/2" BSPP	89.7	41.1	79.7
X2P4342FBBA	**592.00**	6.0						92.7	41.1	82.7
X2P4542FCBA	**592.00**	8.4				3/4" BSPP		96.7	43.1	86.7
X2P4742FCBA	**608.00**	10.8						100.7	47.5	90.7
X2P4942FCBA	**608.00**	14.4	250	290				106.7	47.5	96.7
X2P5142FDCA	**608.00**	16.8	230	270		1" BSPP	3/4" BSPP	110.7	47.5	100.7
X2P5342FDCA	**618.00**	19.2	210	250	3000/700			114.7	47.5	104.7
X2P5542FDCA	**618.00**	22.8	200	240				120.7	55.0	110.7
X2P5742FDCA	**618.00**	26.2	170	210				124.7	55.0	114.7
X2P5942FDCA	**680.00**	30.0	160	200	2500/700			132.7	63.2	122.7
X2P6142FDCA	**680.00**	34.2	150	190				139.7	63.2	129.7
X2P6342FDCA	**680.00**	39.6	140	180				148.7	63.2	138.7

Available as standard rotation CW or CCW

Priority Heads now available, see page 125

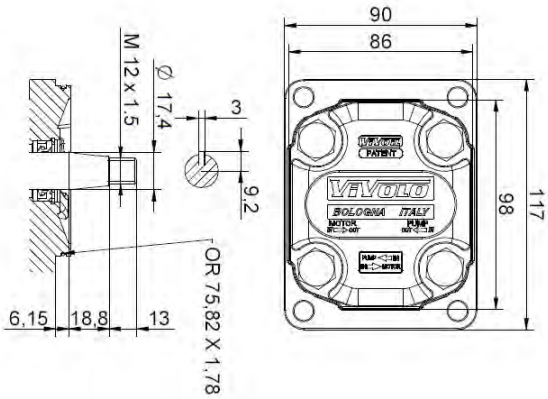

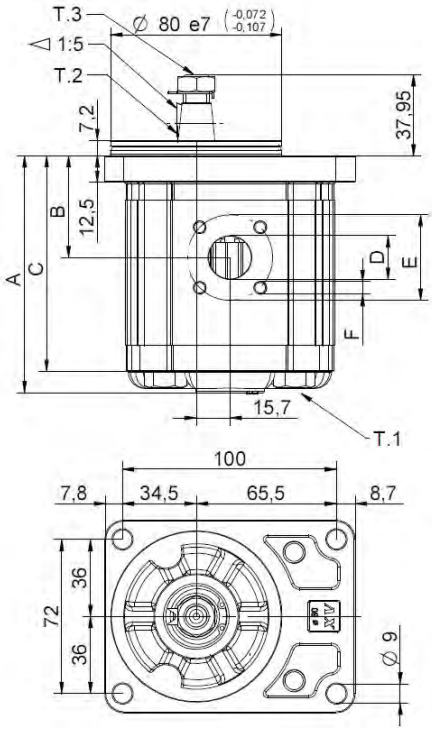

Group 2 SAE A Mount, 5/8" Keyed Shaft

Part Number	List Price $	CC	Max Pressure bar Working	Max Pressure bar Peak	Max/Min Speed	Port S	Port P	A	B mm	C
X2P4152BBBA	**489.00**	4.2	260	300	3500/700	1/2" BSPP	1/2" BSPP	88.0	39.4	78.0
X2P4352BBBA	**489.00**	6.0						91.0	39.4	81.0
X2P4552BCBA	**489.00**	8.4				3/4" BSPP		95.0	41.4	85.0
X2P4752BCBA	**505.00**	10.8						99.0	45.8	89.0
X2P4952BCBA	**505.00**	14.4	250	290				105.0	45.8	95.0
X2P5152BDCA	**505.00**	16.8	230	270		1" BSPP	3/4" BSPP	109.0	45.8	99.0
X2P5352BDCA	**515.00**	19.2	210	250	3000/700			113.0	45.8	103.0
X2P5552BDCA	**515.00**	22.8	200	240				119.0	53.3	109.0
X2P5752BDCA	**515.00**	26.2	170	210				123.0	53.3	113.0
X2P5952BDCA	**577.00**	30.0	160	200	2500/700			131.0	61.5	121.0
X2P6152BDCA	**577.00**	34.2	150	190				138.0	61.5	128.0
X2P6352BDCA	**577.00**	39.6	140	180	2000/700			147.0	61.5	137.0

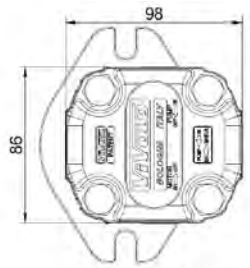

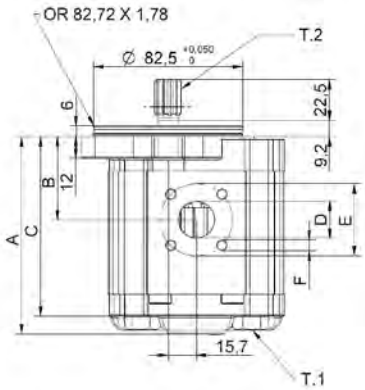

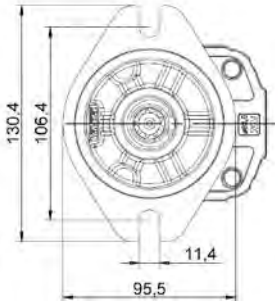

Priority Heads now available, see page 125

Group 2 SAE A Mount, 5/8" 9 Tooth Splined Shaft

Part Number	List Price $	CC	Max Pressure bar Working	Max Pressure bar Peak	Max/Min Speed	Port S	Port P	A	B mm	C
X2P4152IBBA	**489.00**	4.2	260	300	3500/700	1/2" BSPP	1/2" BSPP	88.0	39.4	78.0
X2P4352IBBA	**489.00**	6.0						91.0	39.4	81.0
X2P4552ICBA	**489.00**	8.4				3/4" BSPP		95.0	41.4	85.0
X2P4752ICBA	**505.00**	10.8						99.0	45.8	89.0
X2P4952ICBA	**505.00**	14.4	250	290				105.0	45.8	95.0
X2P5152IDCA	**505.00**	16.8	230	270		1" BSPP	3/4" BSPP	109.0	45.8	99.0
X2P5352IDCA	**515.00**	19.2	210	250	3000/700			113.0	45.8	103.0
X2P5552IDCA	**515.00**	22.8	200	240				119.0	53.3	109.0
X2P5752IDCA	**515.00**	26.2	170	210				123.0	53.3	113.0
X2P5952IDCA	**577.00**	30.0	160	200	2500/700			131.0	61.5	121.0
X2P6152IDCA	**577.00**	34.2	150	190				138.0	61.5	128.0
X2P6352IDCA	**577.00**	39.6	140	180	2000/700			147.0	61.5	137.0

NEW Group 2 SAE A Mount,11 Tooth Shaft (Cast Iron)

Part Number	List Price $	CC	Max Pressure bar Working	Max Pressure bar Peak	Max/Min Speed	Port S	Port P	A mm	B mm	C mm
G2P4152SBBA	**762.00**	4.2	260	300	700/3500	1/2” BSPP	1/2” BSPP	86	42.5	80
G2P4352SCBA	**762.00**	6.0				3/4” BSPP		89	44	83
G2P4552SCBA	**762.00**	8.4						93	46	87
G2P4752SCBA	**762.00**	10.8						97	48	91
G2P4952SCBA	**796.00**	14.4	250	290				103	51	97
G2P5152SCBA	**796.00**	16.8	230	270				107	53	101
G2P5352SDCA	**826.00**	19.2	210	250	700/3000	1” BSPP	3/4” BSPP	111	55	105
G2P5552SDCA	**826.00**	22.8	200	240				117	58	111
G2P5752SDCA	**826.00**	26.2	170	210				121	60	115

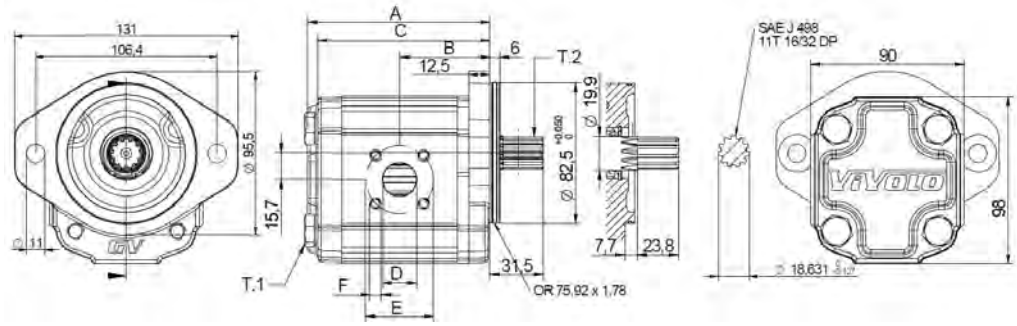

Priority Heads now available, see page 125

NEW Group 2 SAE A Mount,10 Tooth Shaft (Cast Iron)

Part Number	List Price $	CC	Max Pressure bar Working	Max Pressure bar Peak	Max/Min Speed	Port S	Port P	A mm	B mm	C mm
G2P5152RDCA	**796.00**	16.8	230	230	700/3500	1” BSPP	3/4” BSPP	107	53	101
G2P5552RDCA	**826.00**	22.8	200	220	700/3000			117	58	111
G2P5752RDCA	**826.00**	26.2	170	190				121	60	115
G2P5952RDCA	**886.00**	30.0	160	180	700/2500			129	64	123
G2P6152RDCA	**886.00**	34.2	150	170				136	67.5	130

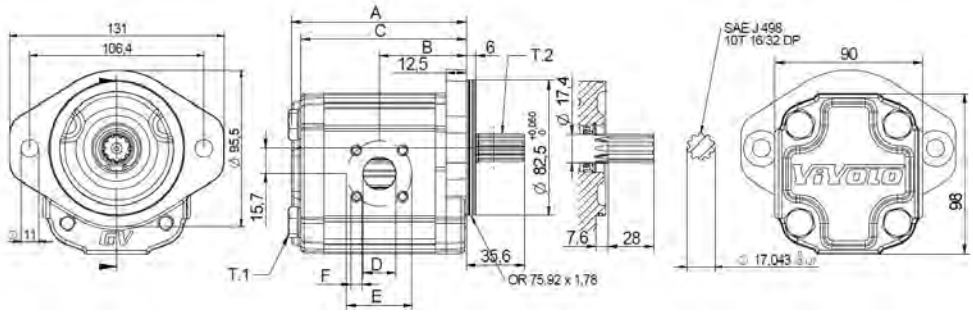

ORDER CODE FOR VIVOIL GROUP 3 PUMPS

Note: Additional costs apply for non-standard options

Series	Group	Pump	Displace-ment	Flange	Shaft	Inlet Port	Outlet Port	Rear Cover
X	3	P	66	32	I	D	D	A

Displacement	
14.9cc	66
17.4cc	68
21.1cc	70
27.0cc	72
32.3cc	74
38.5cc	78
43.4cc	79
47.2cc	80
50.9cc	81
54.6cc	82
60.8cc	83
64.5cc	85
70.7cc	86
74.5cc	87
86.9cc	89

Flange	
LEFT ROTATION *DIN Group 3*	01
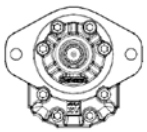 *SAE-B*	31
RIGHT ROTATION *DIN Group 3*	02
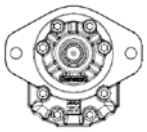 *SAE-B*	32

Ports	Inlet	Outlet
14.9cc	D	D
17.4cc	E	D
21.1cc	E	D
27.0cc	E	D
32.3cc	E	D
38.5cc	E	D
43.4cc	F	E
47.2cc	F	E
50.9cc	F	E
54.6cc	F	E
60.8cc	F	E
64.5cc	F	E
70.7cc	F	E
74.5cc	F	F
86.9cc	F	F
D = 3/4" BSPP		
E = 1" BSPP		
F = 1.1/4" BSPP		

Rear Cover	
	A
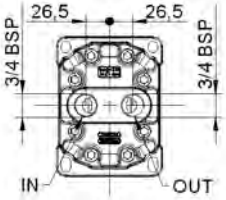	D

Shaft		
CO001 - Tapered T.2 = 482 [Nm] 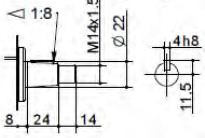 *Tapered 1:8 Ø 22mm - M14x1.5 Key 4mm*	CI004 - Parallel T.2 = 180 [Nm] 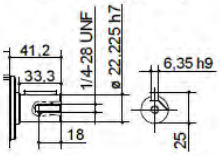 *Parallel Ø 7/8" - Key 6.35mm*	SCF04 - Splined T.2 = 264 [Nm] 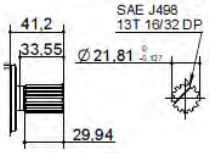 *Splined 7/8" 13t*
A	H	I

Group 3 DIN Mount, 1:8 Tapered Shaft

Part Number	List Price $	CC	Max Pressure bar Working	Max Pressure bar Peak	Max/Min Speed	Port S	Port P	A mm	B mm
X3P6602ADDA	**1015.00**	14.9	300	320	3000/700	3/4" BSPP	3/4" BSPP	124	61
X3P6802AEDA	**1015.00**	17.4				1" BSPP		126	62
X3P7002AEDA	**1015.00**	21.1	280	300				129	63.5
X3P7202AEDA	**1015.00**	27.0	250	270				133	65.5
X3P7402AEDA	**1015.00**	32.3						138	68
X3P7802AEDA	**1082.00**	38.5			2800/700			143	70.5
X3P7902AFEA	**1082.00**	43.4				1.1/4" BSPP	1" BSPP	147	72.5
X3P8002AFEA	**1082.00**	47.2	230	250				230	250
X3P8102AFEA	**1133.00**	50.9						153	75.5
X3P8202AFEA	**1133.00**	54.6			2300/700			156	77
X3P8302AFEA	**1133.00**	60.8						161	79.5
X3P8502AFEA	**1133.00**	64.5	210	230				210	230
X3P8602AFEA	**1185.00**	70.7	200	220				169	83.5
X3P8702AFFA	**1185.00**	74.5	180	200			1.1/4" BSPP	172	85
X3P8902AFFA	**1205.00**	86.9	150	170				182	90

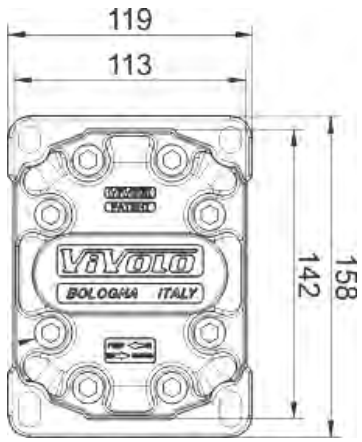

Available as standard rotation CW or CCW

Also available - relief valve option, tandem pumps

Available with SAE A-2 bolt with keyed or spline shaft

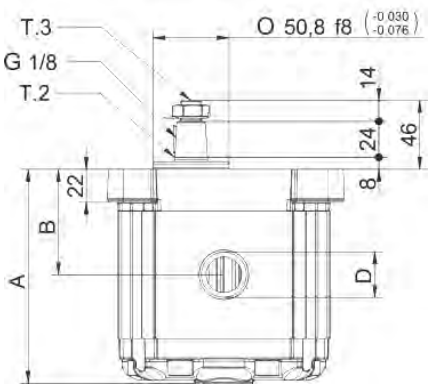

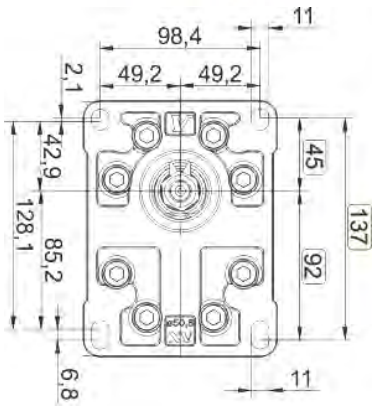

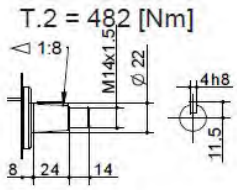

Seal Kit

Part Number	List Price $	Material
8KGX3P1.A	**118.00**	NBR
8KGX3P1.V	**242.00**	Viton

Group 3 SAE B Mount,7/8" Keyed Shaft

Part Number	List Price $	CC	Max Pressure bar Working	Max Pressure bar Peak	Max/Min Speed	Port S	Port P	A mm	B mm
X3P7032HEDA	**1015.00**	21.1	280	300	3000/700	1" BSPP	3/4" BSPP	129	63.5
X3P7232HEDA	**1015.00**	27.0	250	270				133	65.5
X3P7432HEDA	**1015.00**	32.3						138	68
X3P7832HEDA	**1082.00**	38.5			2800/700			143	70.5
X3P7932HFEA	**1082.00**	43.4				1.1/4" BSPP	1" BSPP	147	72.5
X3P8032HFEA	**1082.00**	47.2	230	250				230	250
X3P8132HFEA	**1133.00**	50.9						153	75.5
X3P8232HFEA	**1133.00**	54.6			2300/700			156	77
X3P8332HFEA	**1133.00**	60.8						161	79.5
X3P8532HFEA	**1133.00**	64.5	210	230				210	230
X3P8732HFFA	**1185.00**	74.5	180	200			1.1/4"	172	85

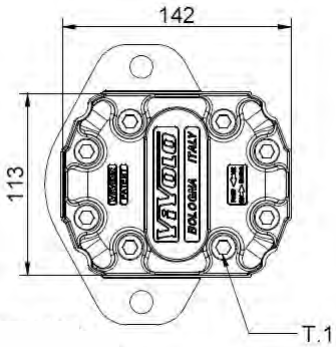

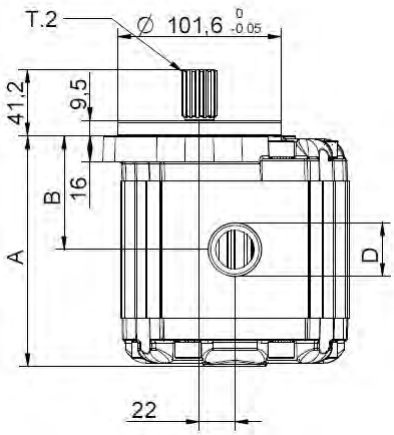

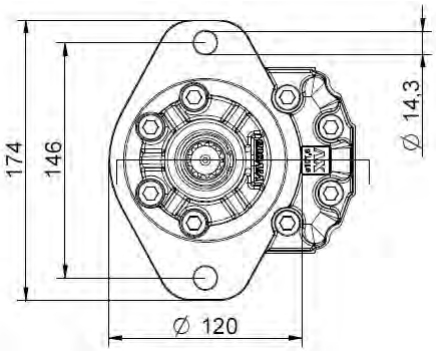

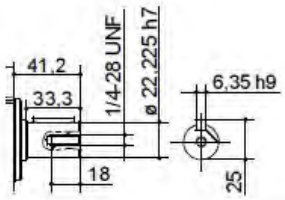

Group 3 SAE B Mount, 7/8" 13 Tooth Splined Shaft

Part Number	List Price $	CC	Max Pressure bar Working	Max Pressure bar Peak	Max/Min Speed	Port S	Port P	A mm	B mm
X3P6632IDDA	**1015.00**	14.9	300	320	3000/700	3/4" BSPP	3/4" BSPP	124	61
X3P6832IEDA	**1015.00**	17.4				1" BSPP		126	62
X3P7032IEDA	**1015.00**	21.1	280	300				129	63.5
X3P7232IEDA	**1015.00**	27.0	250	270				133	65.5
X3P7432IEDA	**1015.00**	32.3						138	68
X3P7832IEDA	**1082.00**	38.5			2800/700			143	70.5
X3P7932IFEA	**1082.00**	43.4				1.1/4" BSPP	1" BSPP	147	72.5
X3P8032IFEA	**1082.00**	47.2	230	250				230	250
X3P8132IFEA	**1133.00**	50.9						153	75.5
X3P8232IFEA	**1133.00**	54.6			2300/700			156	77
X3P8332IFEA	**1133.00**	60.8						161	79.5
X3P8532IFEA	**1133.00**	64.5	210	230				210	230
X3P8632IFEA	**1185.00**	70.7	200	220				169	83.5
X3P8732IFFA	**1185.00**	74.5	180	200			1.1/4" BSPP	172	85
X3P8932IFFA	**1205.00**	86.9	150	170				182	90

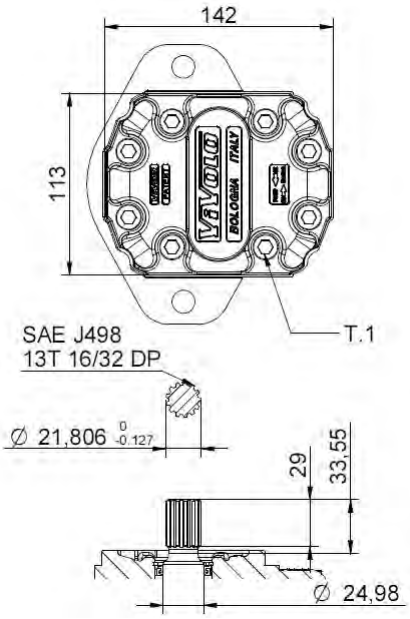

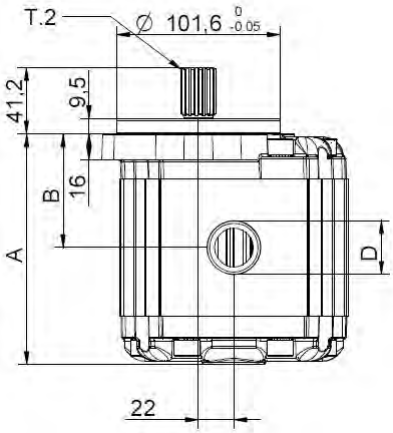

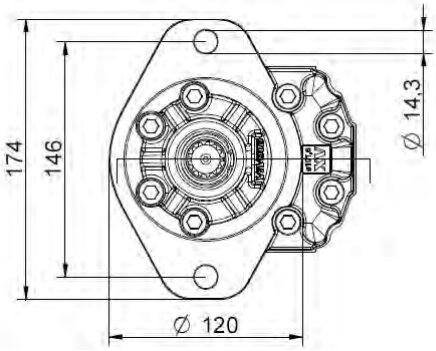

VIVOIL MULTIPLE PUMP NOMENCLATURE

9										
	1	2	3	4	5	6	7	8	9	10

1 Body Shape

M	Standard	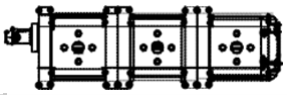
S	Shaped	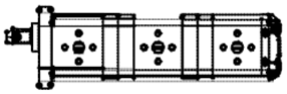
T	Separated Stages	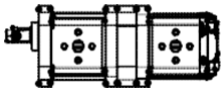
A	Single Inlet	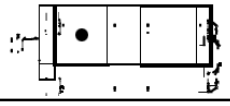

2 Number of Elements

2+

3 Flange & Rotation

	DIN Flange		SAE Flange	
	CW	CCW	CW	CCW
Group 0	02	01	n/a	n/a
Group 1	02	01	62	61
Group 2	02	01	52	51
Group 3	02	01	32	31

4 Shaft

Group 0	7mm Keyed	A
Group 1	DIN 1:8 Taper	F
Group 2	DIN 1:8 Taper	E
	5/8” 9T Spline SAE A	I
Group 3	DIN 1:8 Taper	A
	7/8” Keyed SAE B	H
	7/8” 13T Spline SAE B	I

** Other shafts available ex-Vivoil on request*
** Vivoil do not produce a 5/8” keyed shaft for multiple pumps*

5 Ports

G	BSPP

** Others available ex-Vivoil on request*

6 Rear Cover

A	Standard blank cover
B	Rear suction port
C	Rear pressure port
D	Rear suction & pressure ports
O	Rear relief with internal drain
N	Rear relief with external drain

7+ Displacement CCs

Code	Group 0	Code	Group 1	Code	Group 2	Code	Group 3
01	0.17cc	16	0.9cc	41	4cc	66	15cc
02	0.25cc	17	1.2cc	43	6cc	68	18cc
04	0.45cc	18	1.7cc	45	9cc	70	21cc
05	0.57cc	20	2.2cc	47	11cc	72	27cc
06	0.76cc	21	2.6cc	49	14cc	74	32cc
07	0.98cc	23	3.2cc	51	17cc	78	38cc
09	1.27cc	25	3.8cc	53	19cc	79	43cc
11	1.52cc	27	4.3cc	55	22cc	80	47cc
13	2.30cc	29	4.9cc	57	26cc	81	51cc
		31	5.9cc	59	30cc	82	54cc
		32	6.5cc	61	34cc	83	61cc
		34	7.8cc	63	40cc	85	64cc
		36	9.8cc			86	70cc
						87	74cc
						89	90cc

Group 1 DIN Mount, 1:8 Tapered Shaft

Part Number	List Price $	CC	Pressure Bar Rated	Pressure Bar Max	Max/Min Speed	Port P	Port S
1APG-1.1-L46-Z02-R-SS	**247.00**	1.1	200 bar	250 bar	6000/600	3/8" BSPP	3/8" BSPP
1APG-1.6-L46-Z02-R-SS	**247.00**	1.6					
1APG-2.1-L46-Z02-R-SS	**247.00**	2.1					
1APG-2.7-L46-Z02-R-SS	**247.00**	2.7					
1APG-3.2-L46-Z02-R-SS	**247.00**	3.2			5000/600		
1APG-3.7-L46-Z02-R-SS	**247.00**	3.7			4500/600		
1APG-4.2-L46-Z02-R-SS	**247.00**	4.2			4000/600		
1APG-4.8-L46-Z02-R-SS	**247.00**	4.8	160 bar	200 bar	3500/600		
1APG-5.8-L46-Z02-R-SS	**247.00**	5.8			2900/600		
1APG-8.0-L46-Z02-R-SS	**247.00**	8.0			2100/600		

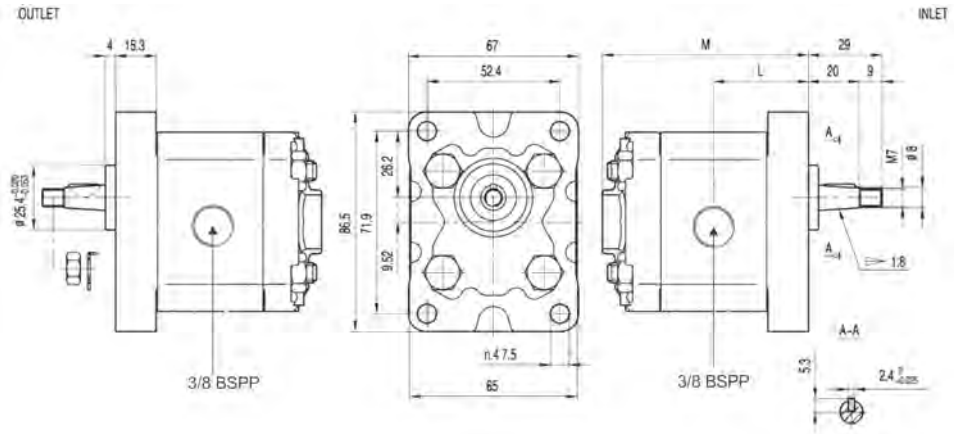

Group 2 DIN Mount, 1:8 Tapered Shaft

Part Number	List Price $	CC	Pressure Bar Rated	Pressure Bar Max	Max/Min Speed	Port P	Port S	M mm	L mm
2APG-4-L04-Z03-R-SS-K	**340.00**	4	175 bar	200 bar	3500/500	1/2" BSPP	1/2" BSPP	93	44.5
2APG-6-L04-Z03-R-SS-K	**340.00**	6						96	46
2APG-8-L08-Z03-R-SS-K	**340.00**	8					3/4" BSPP	93.3	47.7
2APG-10-L08-Z03-R-SS-K	**340.00**	10						102.6	49.3
2APG-12-L08-Z03-R-SS-K	**340.00**	12						105.9	51
2APG-14-L08-Z03-R-SS-K	**340.00**	14						109.3	52.7
2APG-16-L03-Z03-R-SS-K	**340.00**	16						112.7	54
2APG-18-L03-Z03-R-SS-K	**340.00**	18				3/4" BSPP	1" BSPP	116	56
2APG-20-L03-Z03-R-SS-K	**361.00**	20						119.3	57.7
2APG-23-L03-Z03-R-SS-K	**361.00**	23	175 bar	200 bar	3000/500			122.6	59.3
2APG-25-L03-Z03-R-SS-K	**361.00**	25						127.6	61.8
2APG-28-L03-Z03-R-SS-K	**402.00**	28	160 bar	200 bar				132.6	64.3
2APG-30-L03-Z03-R-SS-K	**402.00**	30						135.9	66

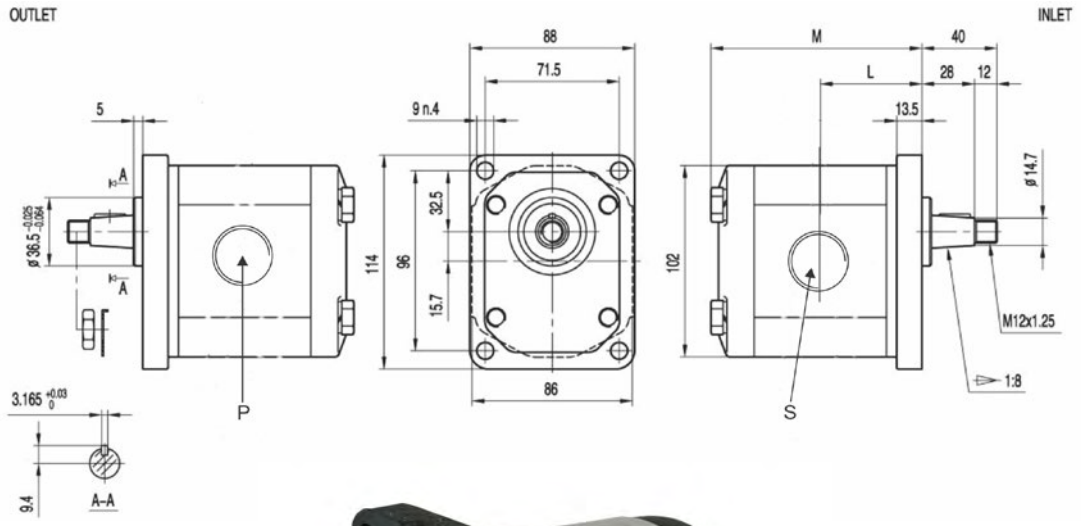

Group 2 SAE A Mount, 5/8" Keyed Shaft

Part Number	List Price $	CC	Pressure Bar Rated	Pressure Bar Max	Max/Min Speed	Port P	Port S
2APG-4-L39-P02-R-SS-K	**340.00**	4	175 bar	200 bar	3500/500	7/8" UNO	1.1/16" UNO
2APG-6-L39-P02-R-SS-K	**340.00**	6					
2APG-8-L42-P02-R-SS-K	**340.00**	8				1.1/16" UNO	1.5/16" UNO
2APG-10-L42-P02-R-SS-K	**340.00**	10					
2APG-12-L42-P02-R-SS-K	**340.00**	12					
2APG-14-L42-P02-R-SS-K	**340.00**	14					
2APG-16-L42-P02-R-SS-K	**340.00**	16					
2APG-18-L42-P02-R-SS-K	**340.00**	18					
2APG-20-L42-P02-R-SS-K	**361.00**	20					
2APG-23-L42-P02-R-SS-K	**361.00**	23	175 bar	200 bar	3000/500		
2APG-25-L42-P02-R-SS-K	**361.00**	25					
2APG-28-L42-P02-R-SS-K	**402.00**	28	160 bar	200 bar			
2APG-30-L42-P02-R-SS-K	**402.00**	30					

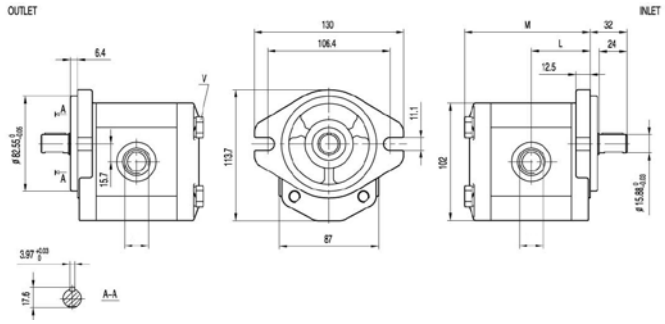

Group 2 SAE A Mount, 5/8" 9T Spline Shaft

Part Number	List Price $	CC	Pressure Bar Rated	Pressure Bar Max	Max/Min Speed	Port P	Port S
2APG-4-L39-S03-R-SS-K	**340.00**	4	175 bar	200 bar	3500/500	7/8" UNO	1.1/16" UNO
2APG-6-L39-S03-R-SS-K	**340.00**	6					
2APG-8-L42-S03-R-SS-K	**340.00**	8				1.1/16" UNO	1.5/16" UNO
2APG-10-L42-S03-R-SS-K	**340.00**	10					
2APG-12-L42-S03-R-SS-K	**340.00**	12					
2APG-14-L42-S03-R-SS-K	**340.00**	14					
2APG-16-L42-S03-R-SS-K	**340.00**	16					
2APG-18-L42-S03-R-SS-K	**340.00**	18					
2APG-20-L42-S03-R-SS-K	**361.00**	20					
2APG-23-L42-S03-R-SS-K	**361.00**	23	175 bar	200 bar	3000/500		
2APG-25-L42-S03-R-SS-K	**361.00**	25					
2APG-28-L42-S03-R-SS-K	**402.00**	28	160 bar	200 bar			
2APG-30-L42-S03-R-SS-K	**402.00**	30					

Group 3 DIN Mount, 1:8 Tapered Shaft

Part Number	List Price $	CC	Pressure Bar Rated	Pressure Bar Max	Max/Min Speed	Port P	Port S	M mm	L mm
3APG-22-L69-Z05-R-SS-K	**608.00**	22	175 bar	200 bar	3000/400	3/4" BSPP	3/4"	128.5	65.5
3APG-26-L03-Z05-R-SS-K	**608.00**	26					1" BSPP	131.5	67
3APG-34-L03-Z05-R-SS-K	**608.00**	34						137	69.8
3APG-39-L03-Z05-R-SS-K	**608.00**	39						141	71.8
3APG-43-L11-Z05-R-SS-K	**659.00**	43			2800/400	1" BSPP	1.1/4" BSPP	143.5	73
3APG-51-L11-Z05-R-SS-K	**659.00**	51						149.5	76
3APG-60-L11-Z05-R-SS-K	**659.00**	60	175 bar	200 bar				156	79.3
3APG-70-L60-Z05-R-SS-K	**711.00**	70			2500/400	1.1/4" BSPP	1.1/2" BSPP	163	82.8
3APG-78-L60-Z05-R-SS-K	**711.00**	78	160 bar	200 bar	2300/400			171	85
3APG-89-L60-Z05-R-SS-K	**711.00**	89	140 bar	180 bar	2000/400			176	88

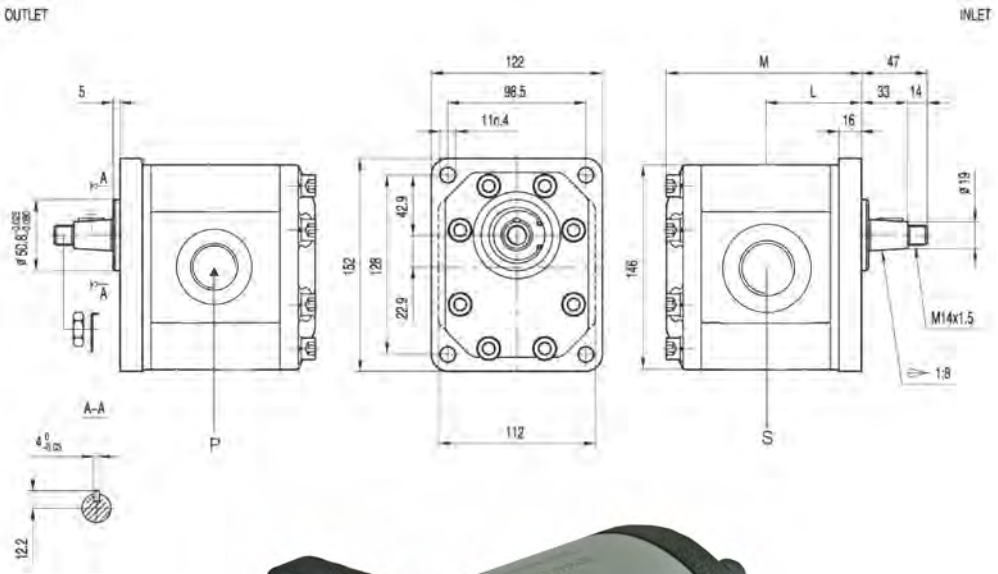

Group 3 SAE B Mount, 7/8" Keyed Shaft

Part Number	List Price $	CC	Max Pressure Rated	Max Pressure Max	Max/Min Speed	Port P	Port S
3APG-22-L42-P16-R-SS-K	**608.00**	22	175 bar	200 bar	3000/400	1.1/16" UNO	1.5/16" UNO
3APG-26-L42-P16-R-SS-K	**608.00**	26					
3APG-34-L42-P16-R-SS-K	**608.00**	34					
3APG-39-L42-P16-R-SS-K	**608.00**	39					
3APG-43-L51-P16-R-SS-K	**659.00**	43			2800/400		1.5/8" UNO
3APG-51-L51-P16-R-SS-K	**659.00**	51					
3APG-60-L53-P16-R-SS-K	**659.00**	60	175 bar	200 bar		1.5/16" UNO	
3APG-70-L53-P16-R-SS-K	**711.00**	70			2500/400		
3APG-78-L53-P16-R-SS-K	**711.00**	78	160 bar	200 bar	2300/400		
3APG-89-L53-P16-R-SS-K	**711.00**	89	140 bar	180 bar	2000/400		

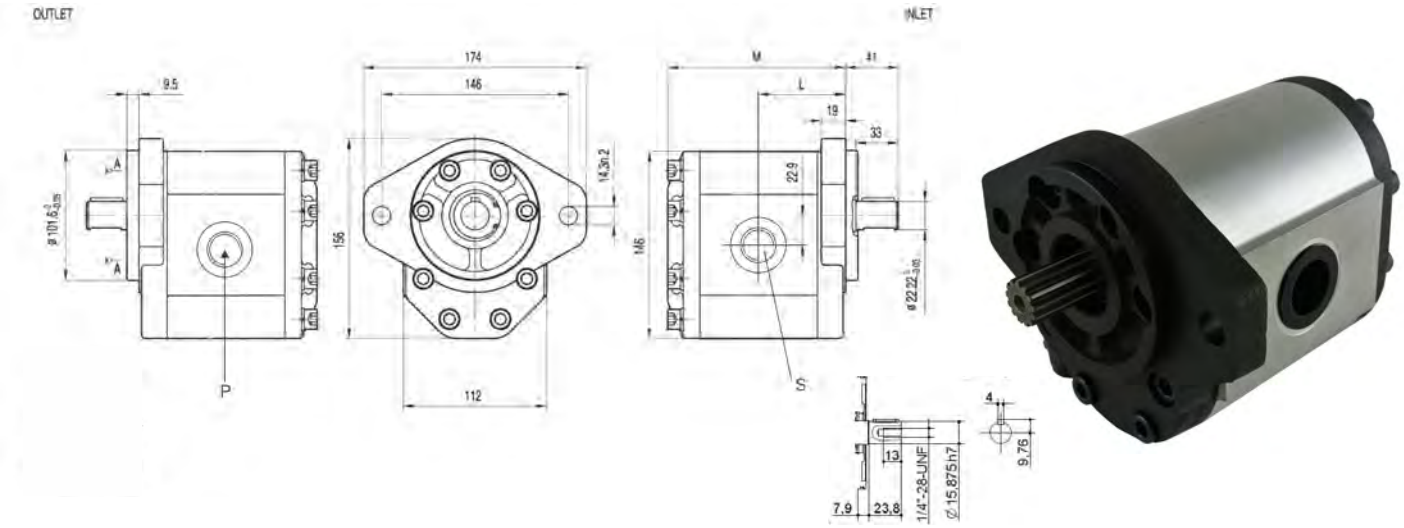

Group 3 SAE B Mount, 7/8" 13T Spline Shaft

Part Number	List Price $	CC	Max Pressure Rated	Max Pressure Max	Max/Min Speed	Port P	Port S
3APG-22-L42-S05-R-SS-K	**608.00**	22	175 bar	200 bar	3000/400	1.1/16" UNO	1.5/16" UNO
3APG-26-L42-S05-R-SS-K	**608.00**	26					
3APG-34-L42-S05-R-SS-K	**608.00**	34					
3APG-39-L42-S05-R-SS-K	**608.00**	39					
3APG-43-L51-S05-R-SS-K	**659.00**	43			2800/400		1.5/8" UNO
3APG-51-L51-S05-R-SS-K	**659.00**	51					
3APG-60-L53-S05-R-SS-K	**659.00**	60	175 bar	200 bar		1.5/16" UNO	
3APG-70-L53-S05-R-SS-K	**711.00**	70			2500/400		
3APG-78-L53-S05-R-SS-K	**711.00**	78	160 bar	200 bar	2300/400		
3APG-89-L53-S05-R-SS-K	**711.00**	89	140 bar	180 bar	2000/400		

Log Splitter

Part Number	List Price $	CC Hi Flow	CC Low Flow	Unload Pressure Range	Max Pressure
CBT8.8/2.1-L08-C	**515.00**	8.8	2.1	30-60 bar	200 bar
CBT8.8/3.0-L08-C	**515.00**	11.8	3.0		
CBT13.0/2.1-L08-C	**567.00**	13.0	2.1		
CBT13.0/3.0-L08-C	**567.00**	13.0	3.0		
CBT13.0/4.2-L08-C	**567.00**	13.0	4.2		

Suction 3/4" BSPP
Pressure 1/2" BSPP

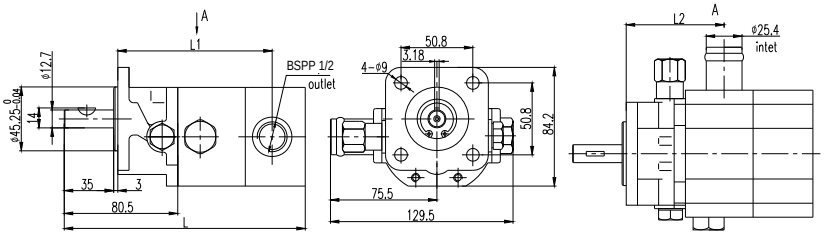

Part Number	List Price $	CC Hi Flow	CC Low Flow	Unload Pressure Range	Max Pressure
CBT15.2/7.6-L03-C	**618.00**	15.2	7.6	30-60 bar	200 bar
CBT22.9/7.6-L03-C	**670.00**	22.9	7.6		

Suction 1" BSPP
Pressure 3/4" BSPP

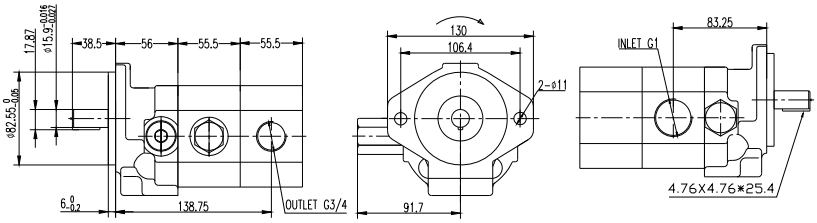

ORDER CODE FOR VIVOIL GROUP 1 MOTORS

Note: Additional costs apply for non-standard options

Series	Group	Motor	Displace-ment	Flange	Shaft	Inlet Port	Outlet Port	Rear Cover
X	1	M	27	01	F	B	B	F

Displacement	
0.9cc	16
1.2cc	17
1.7cc	18
2.2cc	20
2.6cc	21
3.2cc	23
3.8cc	25
4.3cc	27
4.9cc	29
5.9cc	31
6.5cc	32
7.8cc	34
9.8cc	36

Flange	
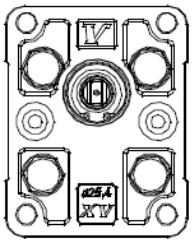 *DIN Group 1*	01
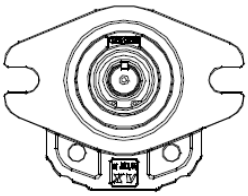 *SAE-AA*	61

Ports	Inlet	Outlet
0.9cc	B	B
1.2cc	B	B
1.7cc	B	B
2.2cc	B	B
2.6cc	B	B
3.2cc	B	B
3.8cc	B	B
4.3cc	B	B
4.9cc	B	B
5.9cc	B	B
6.5cc	B	B
7.8cc	B	B
9.8cc	B	B
B = 3/8" BSPP		

Shaft	
CO001 - Tapered T.2 = 43 [Nm] 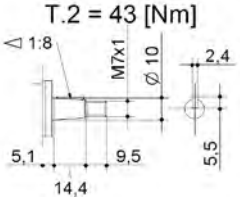 *Tapered 1:8 Ø 10mm - M7x1* *Key 2.4mm*	F
CI002 - Parallel T.2 = 32.8 [Nm] *Parallel Ø 1/2" - Key 3.2mm*	B

Rear Cover	
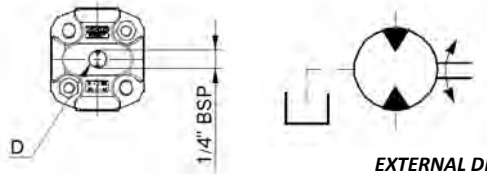 *EXTERNAL DRAIN*	E
INTERNAL DRAIN	F
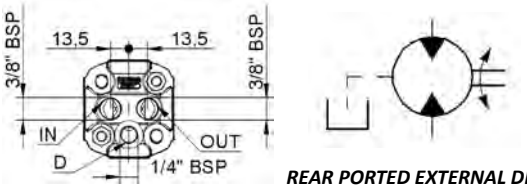 *REAR PORTED EXTERNAL DRAIN*	K

Group 1 DIN Mount, 1:8 Tapered Shaft

Part Number	List Price $	CC	Max Pressure Inlet	Max Pressure Drain	Min Start Pressure	Max/Min Speed	Port S	Port P	A	B mm	C
X1M1601FBBE	**536.00**	0.9	240	6 bar	30	6000/700	3/8" BSPP	3/8" BSPP	78.1	37.3	66.1
X1M1701FBBE	**536.00**	1.2	250						79.0	37.8	67.0
X1M1801FBBE	**536.00**	1.7							80.5	38.5	68.5
X1M2001FBBE	**536.00**	2.2			25				82.5	39.5	70.5
X1M2101FBBE	**536.00**	2.6			20				84.5	40.5	72.5
X1M2301FBBE	**453.00**	3.2			15				86.5	41.5	74.5
X1M2501FBBE	**453.00**	3.8							88.5	42.5	76.5
X1M2701FBBE	**453.00**	4.3							90.5	43.5	78.5
X1M2901FBBE	**474.00**	4.9							93.5	45.0	81.5
X1M3101FBBE	**474.00**	5.9				5000/700			97.0	46.8	85.0
X1M3201FBBE	**474.00**	6.5			10				98.5	48.0	86.5
X1M3401FBBE	**474.00**	7.8	220						103.5	50.0	91.5
X1M3601FBBE	**474.00**	9.8	190			4000/700			112.5	54.5	100.5

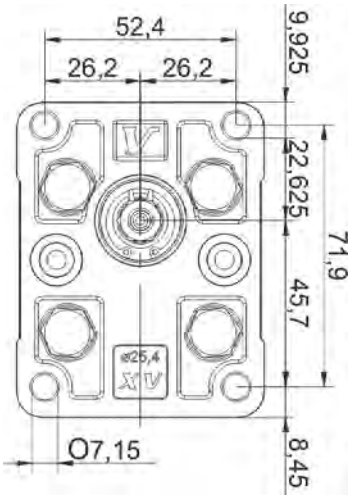

Available with SAE A-2 bolt with keyed or spline shaft

Internal drain available on request

Rear port with drain available

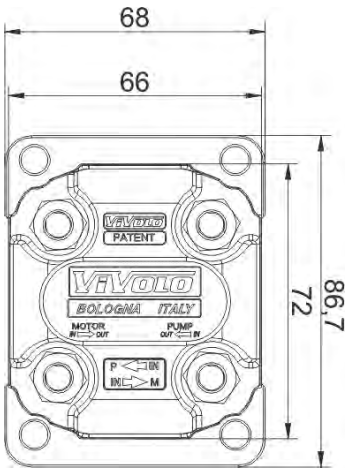

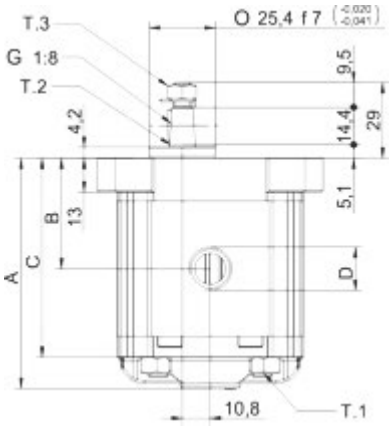

Seal Kit

Part Number	List Price $	Material
8KGX1M1.A	**41.00**	NBR
8KGX1M1.V	**118.00**	Viton

Group 1 SAE AA Mount, 1/2" Keyed Shaft

Part Number	List Price $	CC	Max Pressure Inlet	Max Pressure Drain	Min Start Pressure	Max/Min Speed	Port S	Port P	A mm	B mm	C mm
X1M1661BBBE	**536.00**	0.9	240	6 bar	30	6000/700	3/8" BSPP	3/8" BSPP	82.6	41.8	70.6
X1M1761BBBE	**536.00**	1.2	250						83.5	42.3	71.5
X1M1861BBBE	**536.00**	1.7							85.0	43.0	73.0
X1M2061BBBE	**536.00**	2.2			25				87.0	44.0	75.0
X1M2161BBBE	**536.00**	2.6			20				89.0	45.0	77.0
X1M2361BBBE	**453.00**	3.2			15				91.0	46.5	79.0
X1M2561BBBE	**453.00**	3.8							93.0	47.0	81.0
X1M2761BBBE	**453.00**	4.3							95.0	48.0	83.0
X1M2961BBBE	**474.00**	4.9							98.0	49.5	86.0
X1M3161BBBE	**474.00**	5.9				5000/700			101.5	51.3	89.5
X1M3261BBBE	**474.00**	6.5			10				105.0	52.5	93.0
X1M3461BBBE	**474.00**	7.8	220						108.0	54.5	96.0
X1M3661BBBE	**474.00**	9.8	190			4000/700			117.0	59.0	105.0

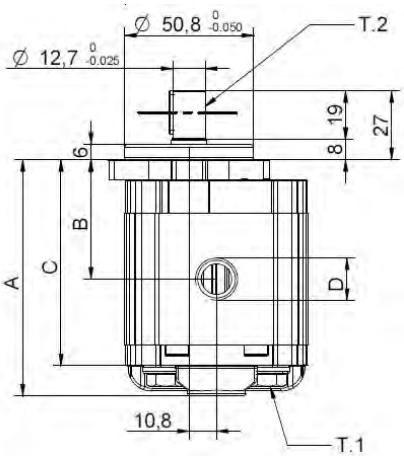

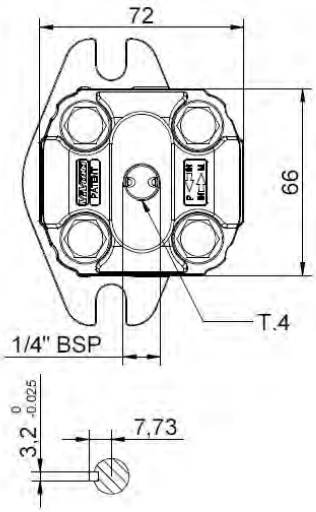

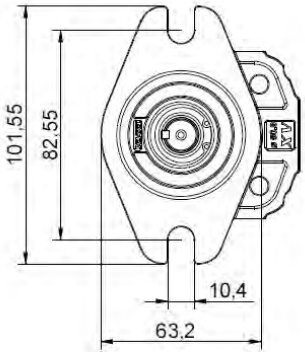

Seal Kit

Part Number	List Price $	Material
8KGX1M2.A	**41.00**	NBR
8KGX1M2.V	**118.00**	Viton

ORDER CODE FOR VIVOIL GROUP 2 MOTORS

Note: Additional costs apply for non-standard options

Series	Group	Motor	Displace-ment	Flange	Shaft	Inlet Port	Outlet Port	Rear Cover
X	2	M	51	32	A	C	C	A

Displacement	
4.2cc	41
6.0cc	43
8.4cc	45
10.8cc	47
14.4cc	49
16.8cc	51
19.2cc	53
22.8cc	55
26.2cc	57
30.0cc	59
34.2cc	61
39.6cc	63

Flange			
DIN Group 2	01	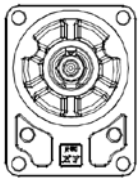 *Ø80 German Standardized*	25
SAE-A	32	*Ø50 HY German Standardized*	13

Shaft	
C0002-Tapered T.2 = 233,2 Nm 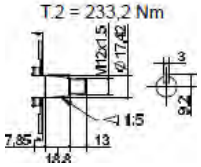 *Tapered 1:5 Ø 17.4mm* *M12x1.5 - Key 3mm* *GERMAN MOUNT ONLY*	F
C0001-Tapered T.2 = 233,2 Nm 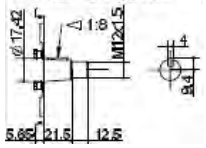 *Tapered 1:8 Ø 17.2mm* *M12x1.5 - Key 4mm*	E
CI001-Parallel T.2 = 44,1 Nm 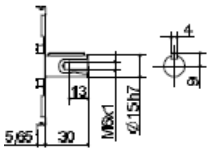 *Parallel Ø 15mm - Key 4mm*	A
CI002-Parallel T.2 = 67,5 Nm 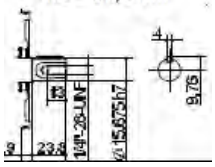 *Parallel Ø 5/8" - Key 4mm*	B
SCF04-Splined T.2 = 104,6 Nm 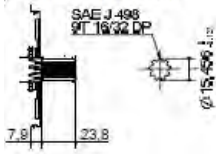 *Splined 9t 16/32 DP*	I

Ports	Inlet	Outlet
4.2cc	B	B
6.0cc	B	B
8.4cc	B	B
10.8cc	B	B
14.4cc	C	C
16.8cc	C	C
19.2cc	C	C
22.8cc	C	C
26.2cc	D	D
30.0cc	D	D
34.2cc	D	D
39.6cc	D	D
B = 1/2" BSPP		
C = 3/4" BSPP		
D = 1" BSPP		

Rear Cover	
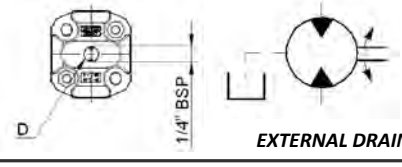 *EXTERNAL DRAIN*	E
 INTERNAL DRAIN	F
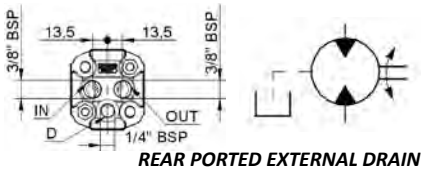 *REAR PORTED EXTERNAL DRAIN*	K
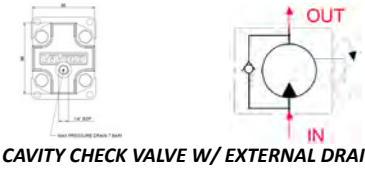 *ANTI CAVITY CHECK VALVE W/ EXTERNAL DRAIN*	001

Group 2 DIN Mount, 1:8 Tapered Shaft

Part Number	List Price $	CC	Max Pressure Inlet	Max Pressure Drain	Min Start Pressure	Max/Min Speed	Port S	Port P	A	B mm	C
X2M4101EBBE	**577.00**	4.2	300	6 Bar	30	3500/700	1/2" BSPP	1/2" BSPP	87.2	41.7	77.2
X2M4301EBBE	**577.00**	6.0			25				90.2	43.2	80.2
X2M4501EBBE	**577.00**	8.4			20				94.2	45.2	84.2
X2M4701EBBE	**577.00**	10.8							98.2	47.2	88.2
X2M4901ECCE	**587.00**	14.4	290		15		3/4" BSPP	3/4" BSPP	104.2	50.2	94.2
X2M5101ECCE	**587.00**	16.8	270						108.2	52.2	98.2
X2M5301ECCE	**618.00**	19.2	250			3000/700			112.2	54.2	102.2
X2M5501ECCE	**618.00**	22.8	240						118.2	57.2	108.2
X2M5701EDDE	**618.00**	26.2	210				1" BSPP	1" BSPP	122.2	59.2	112.2
X2M5901EDDE	**680.00**	30.0	200			2500/700			130.2	63.2	120.2
X2M6101EDDE	**680.00**	34.2	190						137.2	66.7	127.2
X2M6301EDDE	**680.00**	39.6	180			2000/700				71.2	136.2

Available with SAE A-2 bolt with keyed or spline shaft

Internal drain available on request

Rear port with drain available

Available with anti-cavitation check valve

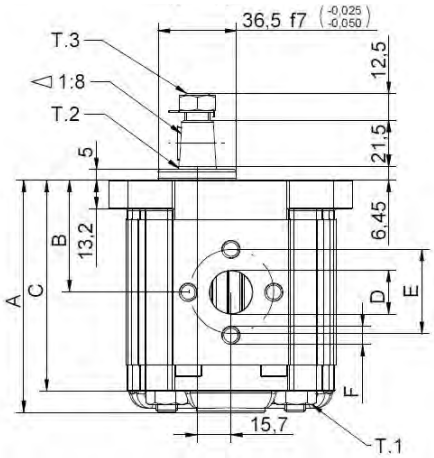

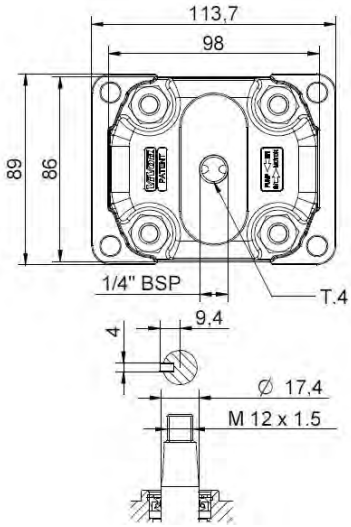

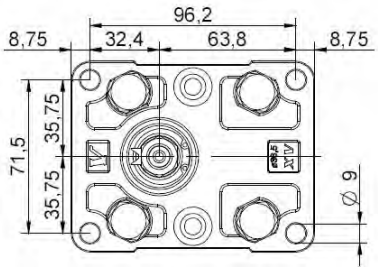

Seal Kit

Part Number	List Price $	Material
8KGX2M1.A	**73.00**	NBR
8KGX2M1.V	**139.00**	Viton

Group 2 SAE A Mount, 5/8" Keyed Shaft

Part Number	List Price $	CC	Max Pressure Inlet	Max Pressure Drain	Min Start Pressure	Max/Min Speed	Port S	Port P	A	B	C
										mm	
X2M4131BBBE	**577.00**	4.2	300	6 Bar	30	3500/700	1/2" BSPP	1/2" BSPP	88.0	39.4	78.0
X2M4331BBBE	**577.00**	6.0			25				91.0	39.4	81.0
X2M4531BBBE	**577.00**	8.4			20				95.0	41.4	85.0
X2M4731BBBE	**577.00**	10.8							99.0	45.8	89.0
X2M4931BCCE	**587.00**	14.4	290		15		3/4" BSPP	3/4" BSPP	105.0	45.8	95.0
X2M5131BCCE	**587.00**	16.8	270						109.0	45.8	99.0
X2M5331BCCE	**618.00**	19.2	250			3000/700			113.0	45.8	103.0
X2M5531BCCE	**618.00**	22.8	240						119.0	53.3	109.0
X2M5731BDDE	**618.00**	26.2	210				1" BSPP	1" BSPP	123.0	53.3	113.0
X2M5931BDDE	**680.00**	30.0	200			2500/700			131.0	61.5	121.0
X2M6131BDDE	**680.00**	34.2	190						138.0	61.5	128.0
X2M6331BDDE	**680.00**	39.6	180			2000/700			147.0	61.5	137.0

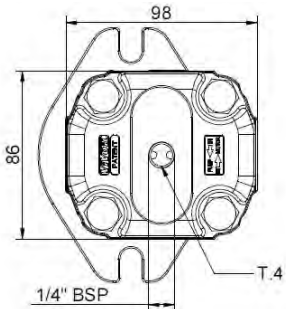

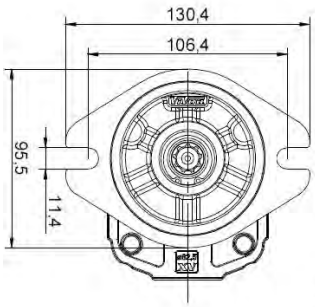

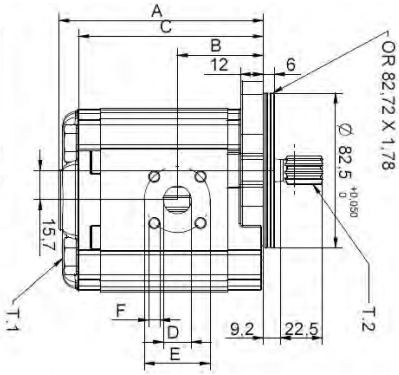

Group 2 SAE A Mount, 5/8" 9 Tooth Splined Shaft

Part Number	List Price $	CC	Max Pressure Inlet	Max Pressure Drain	Min Start Pressure	Max/Min Speed	Port S	Port P	A	B	C
										mm	
X2M4131IBBE	**577.00**	4.2	300	6 Bar	30	3500/700	1/2" BSPP	1/2" BSPP	88.0	39.4	78.0
X2M4331IBBE	**577.00**	6.0			25				91.0	39.4	81.0
X2M4531IBBE	**577.00**	8.4			20				95.0	41.4	85.0
X2M4731IBBE	**577.00**	10.8							99.0	45.8	89.0
X2M4931ICCE	**587.00**	14.4	290		15		3/4" BSPP	3/4" BSPP	105.0	45.8	95.0
X2M5131ICCE	**587.00**	16.8	270						109.0	45.8	99.0
X2M5331ICCE	**618.00**	19.2	250			3000/700			113.0	45.8	103.0
X2M5531ICCE	**618.00**	22.8	240						119.0	53.3	109.0
X2M5731IDDE	**618.00**	26.2	210				1" BSPP	1" BSPP	123.0	53.3	113.0
X2M5931IDDE	**680.00**	30.0	200			2500/700			131.0	61.5	121.0
X2M6131IDDE	**680.00**	34.2	190						138.0	61.5	128.0
X2M6331IDDE	**680.00**	39.6	180			2000/700			147.0	61.5	137.0

ORDER CODE FOR VIVOIL GROUP 3 MOTORS

Note: Additional costs apply for non-standard options

Series	Group	Motor	Displace-ment	Flange	Shaft	Inlet Port	Outlet Port	Rear Cover
X	3	M	66	32	I	D	D	A

Displacement	
14.9cc	66
17.4cc	68
21.1cc	70
27.0cc	72
32.3cc	74
38.5cc	78
43.4cc	79
47.2cc	80
50.9cc	81
54.6cc	82
60.8cc	83
64.5cc	85
70.7cc	86
74.5cc	87
86.9cc	89

Shaft	
CO001 - Tapered T.2 = 482 [Nm] 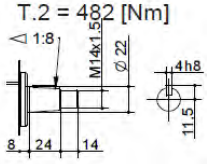 *Tapered 1:8 Ø 22mm - M14x1.5 Key 4mm*	A
CI004 - Parallel T.2 = 180 [Nm] 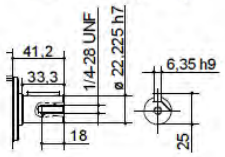 *Parallel Ø 7/8" - Key 6.35mm*	H
SCF04 - Splined T.2 = 264 [Nm] 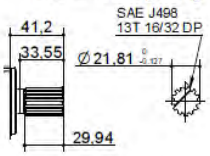 *Splined 7/8" 13t*	I

Ports	Inlet	Outlet
14.9cc	D	D
17.4cc	D	D
21.1cc	D	D
27.0cc	E	E
32.3cc	E	E
38.5cc	E	E
43.4cc	E	E
47.2cc	E	E
50.9cc	E	E
54.6cc	E	E
60.8cc	E	E
64.5cc	E	E
70.7cc	F	F
74.5cc	F	F
86.9cc	F	F
D = 3/4" BSPP		
E = 1" BSPP		
F = 1.1/4" BSPP		

Flange	
 DIN Group 3	01
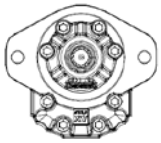 *SAE-B*	31

Rear Cover	
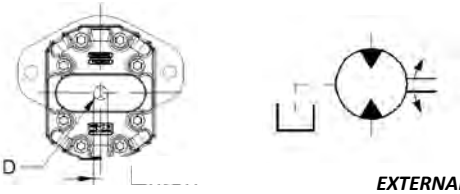 *EXTERNAL DRAIN*	E
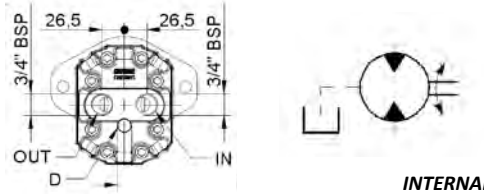 *INTERNAL DRAIN*	K

Group 3 DIN Mount, 1:8 Tapered Shaft

Part Number	List Price $	CC	Max Pressure Inlet	Max Pressure Drain	Min Start Pressure	Max/Min Speed	Port S	Port P	A mm	B mm
X3M6601ADDE	**1236.00**	14.9	320	6 Bar	20	3000/700	3/4" BSPP	3/4" BSPP	124	61
X3M6801ADDE	**1236.00**	17.4							126	62
X3M7001ADDE	**1257.00**	21.1	300		15				129	63.5
X3M7201AEEE	**1257.00**	27.0	270		10				133	65.5
X3M7401AEEE	**1318.00**	32.3					1" BSPP	1" BSPP	138	68
X3M7801AEEE	**1318.00**	38.5				2800/700			143	70.5
X3M7901AEEE	**1318.00**	43.4	250						147	72.5
X3M8001AEEE	**1360.00**	47.2							150	74
X3M8101AEEE	**1360.00**	50.9							153	75.5
X3M8201AEEE	**1360.00**	54.6				2300/700			156	77
X3M8301AFFE	**1360.00**	60.8	220				1.1/4" BSPP	1.1/4" BSPP	161	79.5
X3M8501AFFE	**1360.00**	64.5							164	81
X3M8601AFFE	**1421.00**	70.7	210						169	83.5
X3M8701AFFE	**1421.00**	74.5	190						172	85
X3M8901AFFE	**1421.00**	86.9	160						182	90

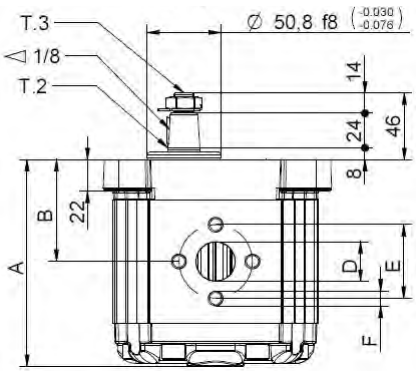

Available with SAE A-2 bolt with keyed or spline shaft

Rear port with drain available

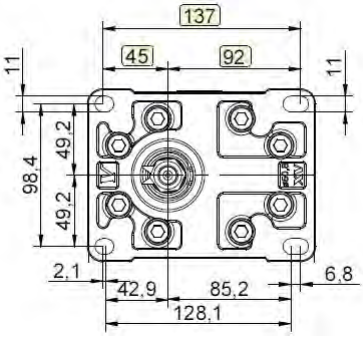

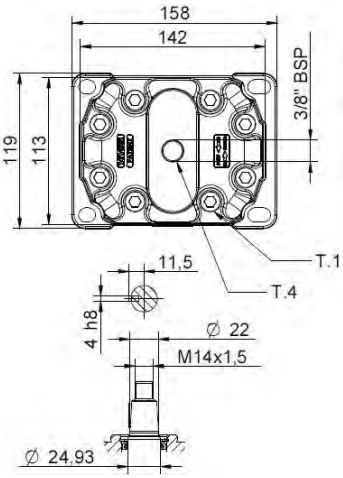

Seal Kit

Part Number	List Price $	Material
8KGX3M1.A	**134.00**	NBR
8KGX3M1.V	**252.00**	Viton

Group 3 SAE B Mount, 7/8" Keyed Shaft

Part Number	List Price $	CC	Max Pressure Inlet	Max Pressure Drain	Min Start Pressure	Max/Min Speed	Port S	Port P	A mm	B mm
X3M6631BDDE	**1236.00**	14.9	320	6 Bar	20	3000/700	3/4" BSPP	3/4" BSPP	124	61
X3M6831BDDE	**1236.00**	17.4							126	62
X3M7031BDDE	**1257.00**	21.1	300		15				129	63.5
X3M7231HEEE	**1257.00**	27.0	270		10				133	65.5
X3M7431HEEE	**1318.00**	32.3					1" BSPP	1" BSPP	138	68
X3M7831HEEE	**1318.00**	38.5				2800/700			143	70.5
X3M7931HEEE	**1318.00**	43.4	250						147	72.5
X3M8031HEEE	**1360.00**	47.2							150	74
X3M8131HEEE	**1360.00**	50.9							153	75.5
X3M8231HEEE	**1360.00**	54.6				2300/700			156	77
X3M8331HFFE	**1360.00**	60.8	220				1.1/4" BSPP	1.1/4" BSPP	161	79.5
X3M8531HFFE	**1360.00**	64.5							164	81
X3M8631HFFE	**1421.00**	70.7	210						169	83.5
X3M8731HFFE	**1421.00**	74.5	190						172	85
X3M8931HFFE	**1421.00**	86.9	160						182	90

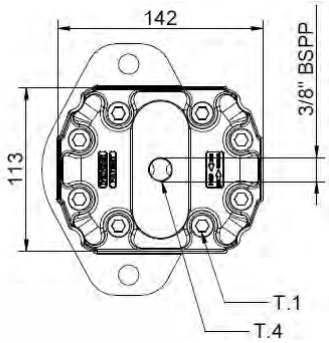

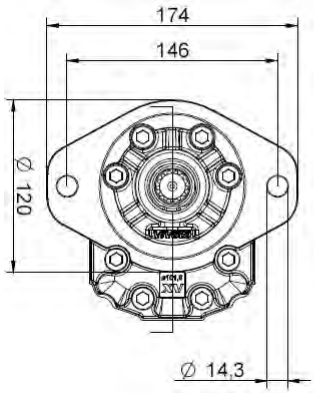

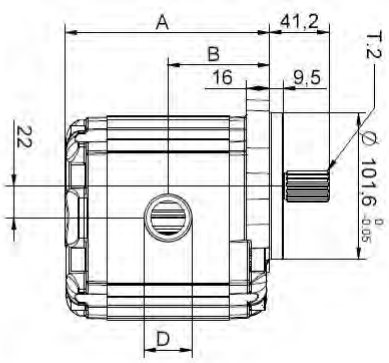

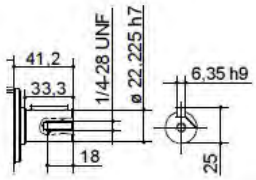

Group 3 SAE B Mount, 7/8" 13 Tooth Splined Shaft

Part Number	List Price $	CC	Max Pressure Inlet	Max Pressure Drain	Min Start Pressure	Max/Min Speed	Port S	Port P	A mm	B mm
X3M6631IDDE	**1236.00**	14.9	320	6 Bar	20	3000/700	3/4" BSPP	3/4" BSPP	124	61
X3M6831IDDE	**1236.00**	17.4							126	62
X3M7031IDDE	**1257.00**	21.1	300		15				129	63.5
X3M7231IEEE	**1257.00**	27.0	270		10				133	65.5
X3M7431IEEE	**1318.00**	32.3					1" BSPP	1" BSPP	138	68
X3M7831IEEE	**1318.00**	38.5				2800/700			143	70.5
X3M7931IEEE	**1318.00**	43.4	250						147	72.5
X3M8031IEEE	**1360.00**	47.2							150	74
X3M8131IEEE	**1360.00**	50.9							153	75.5
X3M8231IEEE	**1360.00**	54.6				2300/700			156	77
X3M8331IFFE	**1360.00**	60.8	220				1.1/4" BSPP	1.1/4" BSPP	161	79.5
X3M8531IFFE	**1360.00**	64.5							164	81
X3M8631IFFE	**1421.00**	70.7	210						169	83.5
X3M8731IFFE	**1421.00**	74.5	190						172	85
X3M8931IFFE	**1421.00**	86.9	160						182	90

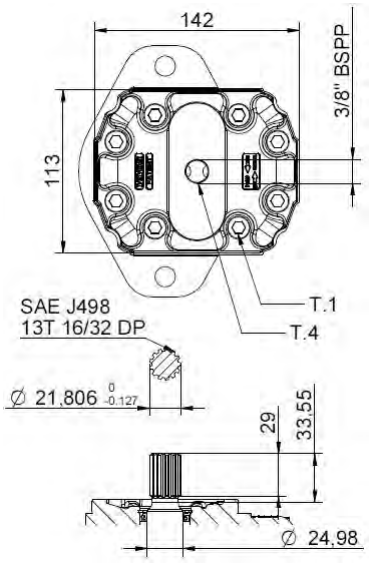

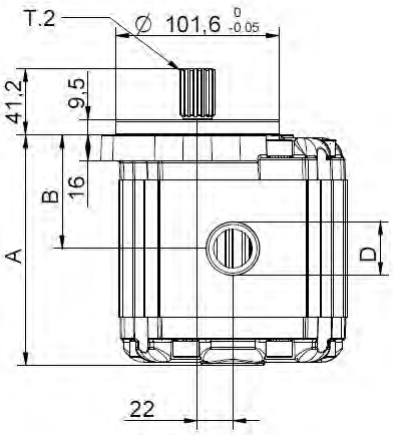

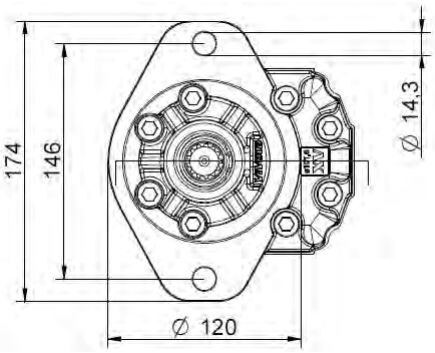

2-way Rotary Gear Flow Dividers, Differential Relief

Part Number	List Price $	Displacement per Section	Body Size	Max Pressure	Inlet Flow Ratings LPM			Port Size BSPP		Relief Range
					Min	Recommended	Max	In	Out	
9RV02B04	**1705.00**	0.45	Group 0	210 bar	1.2	2.4	6	1/4”	1/4”	35-175 bar
9RV02B06	**1705.00**	0.76			2	4	9.6			
9RV02B09	**1705.00**	1.27			3	6	14.4			
9RV02A18	**1962.00**	1.7	Group 1	220 bar	4	8	18	1/2”	3/8”	7-210 bar
9RV02A23	**1962.00**	3.2			7	15	36			
9RV02A32	**2039.00**	6.5			13	26	60			
9RV02B45	**2333.00**	8.4	Group 2	210 bar	21.6	30.2	45	3/4”	1/2”	70-210 bar
9RV02B47	**2333.00**	10.8			26.4	38.8	55			

EXTERNAL DRAIN (Standard Setup)

For the correct functioning of the flow divider, ***it has to be installed under the oil level***.
The drain tube has to pick up under the oil level and it has not to aspire air.

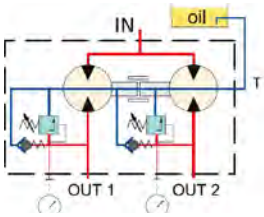

INTERNAL DRAIN (Standard Setup)

Note that with this configuration the function of anticavitation valves is anulled.

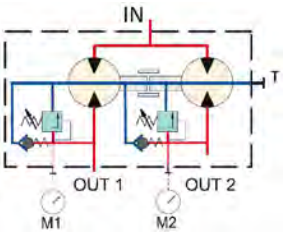

4-way Rotary Gear Flow Dividers, Differential Relief

Part Number	List Price $	Displacement per Section	Body Size	Max Pressure	Inlet Flow Ratings LPM			Port Size BSPP		Relief Range
					Min	Recommended	Max	In	Out	
9RV04B04	**3409.00**	0.45	Group 0	210 bar	2.4	4.8	12	1/4”	1/4”	35-175 bar
9RV04B06	**3409.00**	0.76			4	8	19.2			
9RV04B09	**3409.00**	1.27			6	12	28.8			
9RV04A18	**3924.00**	1.7	Group 1	220 bar	8	16	36	1/2”	3/8”	7-210 bar
9RV04A23	**3924.00**	3.2			14	30	72			
9RV04A32	**4079.00**	6.5			26	52	120			
9RV04B45	**3955.00**	8.4	Group 2	210 bar	43.2	60.4	90	3/4”	1/2”	70-210 bar
9RV04B47	**4027.00**	10.8			52.8	77.6	110			

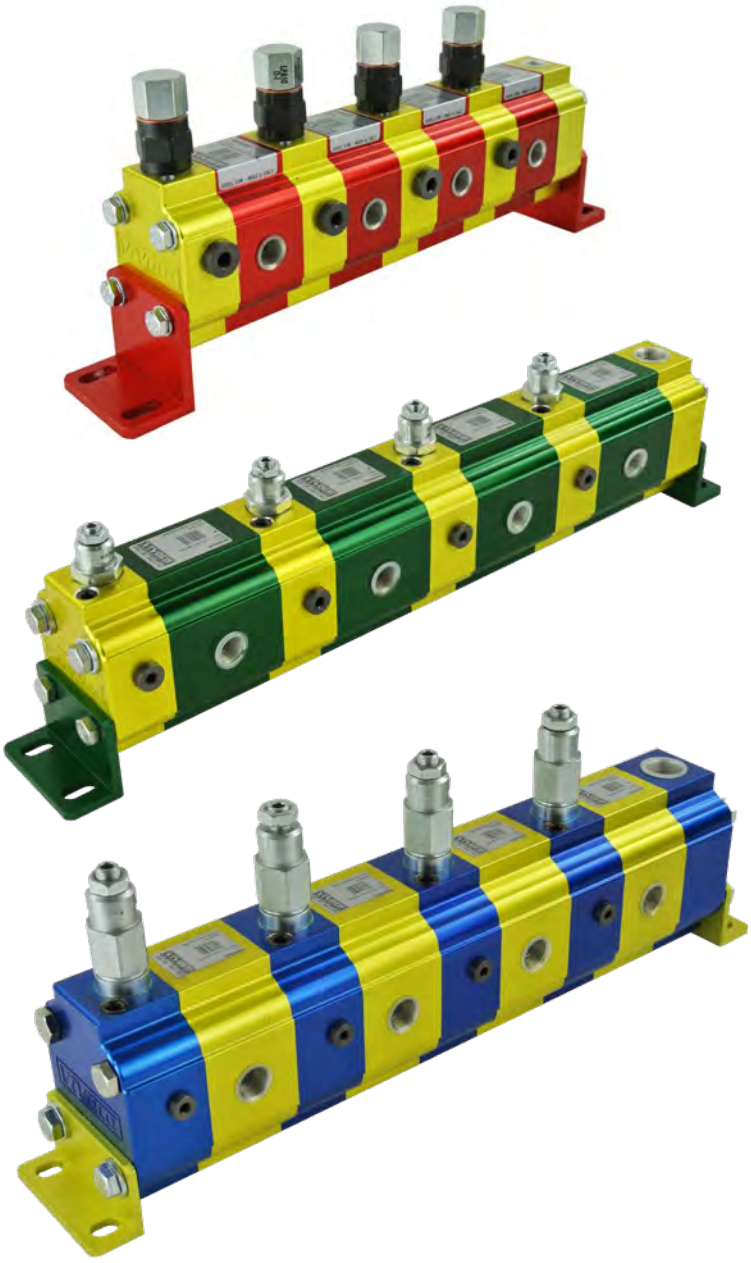

EXTERNAL DRAIN
(Standard Setup)

For the correct functioning of the flow divider, ***it has to be installed under the oil level***.
The drain tube has to pick up under the oil level and it has not to aspire air.

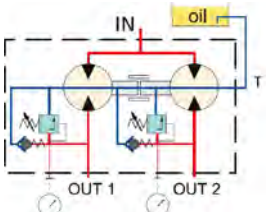

INTERNAL DRAIN
(Standard Setup)

Note that with this configuration the function of anticavitation valves is anulled.

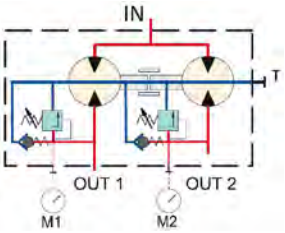

2-way Rotary Gear Flow Dividers, Differential Relief

Part Number	List Price $	Max Pressure		Inlet Min Flow	Inlet Max Flow	Port Size BSPP		Pressure drop
		Continuous	Differential			In	Out	
1FDF-1.6-L05-2	**700.00**	240 bar	124 bar	3 lpm	10 lpm	1/2”	3/8”	16-19 bar
1FDF-3.18-L08-2	**711.00**			6 lpm	20 lpm	3/4”	1/2”	
1FDF-5.29-L08-2	**824.00**			10 lpm	32 lpm			
1FDF-8.42-L08-2	**870.00**			16 lpm	42 lpm			

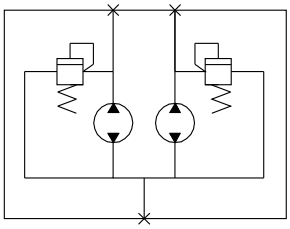

Part Number	List Price $	Max Pressure		Inlet Min Flow	Inlet Max Flow	Port Size BSPP		Pressure drop
		Continuous	Differential			In	Out	
2FDF-14-L08-2	**1648.00**	220 bar	200 bar	28 lpm	70 lpm	3/4”	1/2”	11-14 bar
2FDF-25-L03-2	**1679.00**			50 lpm	125 lpm	1”	3/4”	

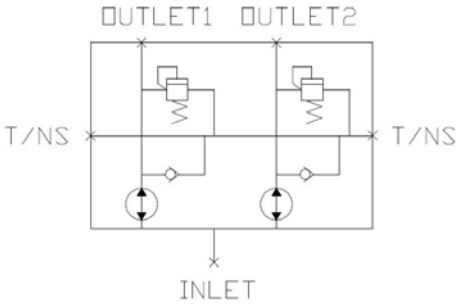

Differential Relief Valves
Standard setting 750 psi

4-way Rotary Gear Flow Dividers, Differential Relief

Part Number	List Price $	Max Pressure		Inlet Min Flow	Inlet Max Flow	Port Size BSPP		Pressure drop
		Continuous	Differential			In	Out	
1FDF-1.6-L05-4	**1370.00**	240 bar	124 bar	3.2 lpm	10 lpm	1/2”	3/8”	16-19 bar
1FDF-3.18-L08-4	**1473.00**			6 lpm	20 lpm	3/4”	1/2”	
1FDF-5.29-L08-4	**1679.00**			10 lpm	32 lpm			
1FDF-8.42-L08-4	**1782.00**			16 lpm	50 lpm	1”		
2FDF-14-L08-4	**3739.00**	220 bar	200 bar	28 lpm	140 lpm		3/4”	11-14 bar
2FDF-25-L03-4	**3811.00**			50 lpm	250 lpm	1.1/2”	1”	

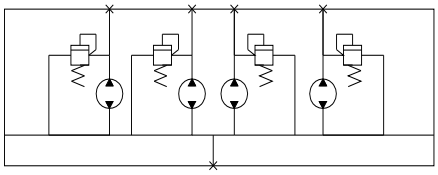

1FDF

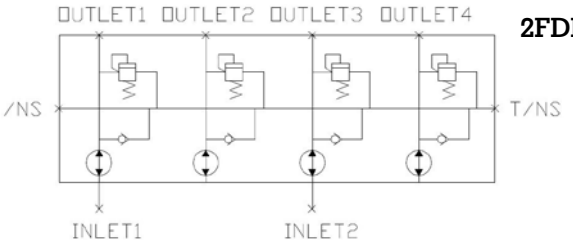

2FDF

6-way Rotary Gear Flow Dividers, Differential Relief
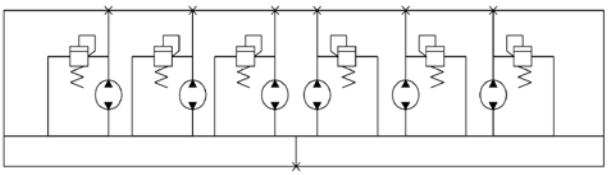
Part Number	List Price $	Max Pressure		Inlet Min Flow	Inlet Max Flow	Port Size BSPP		Pressure drop
		Continuous	Differential			In	Out	
1FDF-2.0-L05-6	**2338.00**	240 bar	124 bar	12 lpm	36 lpm	1/2”	3/8”	16-19 bar