CATFORD ENGINEERING PRODUCTS

Jamestown
SA 5491

All Prices Excluding GST

Phone: 0418 641 566

www.catford.com.au sales@catford.com.au

Hydraulic Power Units, Parts & Accessories

*DC & AC Power Units, Continuous Duty Power Units
*Industrial Power Units *Petrol & Diesel Power Units
*Controllers *Tanks *DC & AC Motors *Start Solenoids
*Accessories

Lot 25, Mannanarie Road, Jamestown, South Australia 5491

PO Box 178, Jamestown, South Australia 5491

0418 641 566

sales@catford.com.au

Due to fluctuations in the Australian dollar and the economic climate, please be advised that all prices are subject to change.
Please contact us to confirm pricing.

All prices stated within are exclusive of GST
(All prices are correct as of January 1st 2021, but Catford Engineering reserve the right to change these prices without notice)

Hydraulic Power Units, Parts & Accessories

CATFORD ENGINEERING PRODUCTS

Jamestown
SA 5491

Phone: 0418 641 566
www.catford.com.au sales@catford.com.au

Industrial Power Units 10

Continuous Duty Power Unit Nomenclature Chart 12

Continuous Duty Power Units AC 240v & 415v (0.25kW - 0.75kw) 13

Continuous Duty Power Units AC 244v & 415v (1.1kW - 4.0kW) 13

Continuous Duty Power Units AC - Electric Motors & Pumps 14

Power Unit Nomenclature Chart 16

Micro Power Units DC (350w - 800w) 17

Power Units DC (1.6kW - 2.2kW) 18

High Power Units DC (2.5kW - 4.0kW) 22

Power Units AC 240v (1.1kW - 2.2kW) 25

Power Units AC 415v (1.1kW - 2.2kW) 26

Power Units AC 415v (3.0W - 4.0kW) 27

Petrol & Diesel Power Units 28

Power Unit DC Motors & Start Solenoids 29

Power Unit AC Motors 30

Power Unit Premium Gear Pumps 30

Power Unit Standard Gear Pumps 31

Power Unit Accessories & Tank Options 32

Power Unit Pendant Controllers 34

Power Unit DIN Plugs 36

PREMIUM ITALIAN PRODUCT

TOTAL PRICE = GROUP 1 $ + GROUP 2 $ + GROUP 3 $ + GROUP 4 $

Note: These prices are a guide only as every industrial power unit has different specifications. Please contact us for a detailed quotation.

GROUP 1 - Motor

Motor Size	List Price $	Volts	Detail
0.55 kW	**830.00**	240v AC	The pricing within this group incorporates components that are arranged within the electric motor: motor, coupling, bell housing, gaskets.
0.75 kW	**882.00**		
1.1 kW	**1141.00**		
1.5 kW	**1293.00**		
2.2 kW	**1494.00**		
3.0 kW	**1555.00**		
0.55 kW	**592.00**	415v AC	
0.75 kW	**731.00**		
1.1 kW	**917.00**		
1.5 kW	**999.00**		
2.2 kW	**1118.00**		
3.0 kW	**1303.00**		
4.0 kW	**1576.00**		
5.5 kW	**2039.00**		
7.5 kW	**2189.00**		
11.0 kW	**3414.00**		
15.0 kW	**3929.00**		

GROUP 2 - Pump

Pump	List Price $	Detail
Group 1 Pump	680.00	The pricing within this group incorporates components that are arranged within the pump(s) - based on Vivoil single pumps and tandem pumps: pump suction strainer, check valve, hose & fittings.
Group 2 Pump	979.00	
Group 3 Pump	1710.00	
Hi-lo Group 2/1 Tandem	1854.00	
Hi-lo Group 2/2 Tandem	2060.00	
Hi-lo Group 3/2 Tandem	2956.00	

GROUP 3 - Tank

Tank Size	List Price $	Detail
10 L	556.00	The pricing within this group incorporates components that are arranged within the tank: tank lid filler breather & filters. Standard tank is powder coated and comes with filler breather, level temperature gauge, cork gasket and return filter.
25 L	1391.00	
40 L	1555.00	
70 L	1833.00	
120 L	2451.00	
200 L	2843.00	
300 L	3296.00	
400 L	3780.00	

GROUP 4 - Manifold & Valve

Valve Arrangement	STANDARD RANGE List Price $	PREMIUM RANGE List Price $	PREMIUM RANGE	DETAILS
1/2" P + T Manifold	330.00	n/a	115v AC 230v AC Coils add $30.00	The pricing within this group incorporates components that are arranged within the manifold & valve: manifold, gauge, isolator, hose & fittings. A cartridge unloader valve is included with multiple valves. A pressure gauge is included as standard with the manifold.
3/4" P + T Manifold	464.00	n/a		
Cetop 3 - 1 valve	896.00	1102.00		
Cetop 3 - 2 valves	1267.00	1669.00		
Cetop 3 - 3 valves	1669.00	2271.00		
Cetop 3 - 4 valves	2009.00	2812.00		
Cetop 3 - 5 valves	2333.00	3337.00		
Cetop 3 - 6 valves	2709.00	3914.00		
Cetop 5 - 1 valve	1164.00	1643.00		
Cetop 5 - 2 valves	1509.00	2117.00		
Cetop 5 - 3 valves	1978.00	2889.00		
Cetop 5 - 4 valves	2508.00	3723.00		
Cetop 5 - 5 valves	3147.00	4666.00		
Cetop 5 - 6 valves	3744.00	5567.00		

Note: Standard Range of Cetops are manufactured in China, Premium Range are manufactured in Italy

Continuous Duty Power Unit Nomenclature

Series	Motor & Voltage	Valve	Valve Type	Unload Valve	Suction	Pump CC	Tank	Special
BP13	025AA	132	E	U	H	42	5B	V

MOTOR	DESCRIPTION
240v AC	
025AA	0.25kW
037AA	0.37kW
055AA	0.55kW
075AA	0.75kW
11AA	1.1kW
15AA	1.5kW
22AA	2.2kW
3AA	3.0kW
37AA	3.7kW
415v AC	
025AC	0.25kW
037AC	0.37kW
055AC	0.55kW
075AC	0.75kW
11AC	1.1kW
15AC	1.5kW
22AC	2.2kW
3AC	3kW
37AC	3.7kW
4AC	4.0kW
All electric motors are 4 pole For more information, see page 15	

VALVE	DESCRIPTION
010	P & T
030	Single Acting
03M	Single Acting with override
131	1 x Double Acting
132	2 x Double Acting
133	3 x Double Acting

VALVE TYPE	DESCRIPTION
Z	Closed Centre
C	Tandem Centre
H	Open Centre
Y	A & B to T
S	Crossover S/A

SUCTION	DESCRIPTION
U	Unload Valve
-	No Unload

SUCTION	DESCRIPTION
H	Horizontal Mount
V	Vertical Mount

PUMP	DESCRIPTION
09	0.9 cc
12	1.2 cc
17	1.7 cc
21	2.1 cc
27	2.7 cc
32	3.2 cc
37	3.7 cc
42	4.2 cc
48	4.8 cc
58	5.8 cc
70	7.0 cc
80	8.0 cc
98	9.8 cc
Technical information - see page 15	

TANK	DESCRIPTION
2B	MT2AB 7.5L
3B	MT3AB 10L
4B	MT4AB 12L
5B	MT5AB 15L
8B	MT18AB 18L
4H	HR4ABC 22L
5H	HR5ABC 30L
6H	HR6ABC 35L
MP	No Tank
MPR	No Tank No Relief
Technical information - see page 33	

SPECIAL	DESCRIPTION
MPR	Motor Pump with Relief Valve
MP	Motor Pump
SW	Sandwich Valve
SWHP	Sandwich Valve Handpump
SWM	Sandwich Valve Manual Override
COV	CETOP Override
V	Vivoil Pump
Multiple special options separated by /	

NEW BP13 Series Power Unit - 240v, 0.25kW - 0.75kW

Part Number	List Price $	Power	RPM	Volts	Function	Pump	Ports	Tank Usable	Relief Set
BP13-025AA010H083B	**1855.00**	0.25 kW	1320	240v AC	P + T	0.8 cc	9/16" UNO	10 L	1600 psi
BP13-037AA010H083B	**1885.00**	0.37 kW	1380						2500 psi
BP13-055AA010H113B	**2000.00**	0.55 kW	1400			1.1 cc			
BP13-075AA010H113B	**2050.00**	0.75 kW	1410						
BP13-025AA131CH083B	**2105.00**	0.25 kW	1320		D/A	0.8 cc			1600 psi
BP13-037AA131CH083B	**2135.00**	0.37 kW	1380						2500 psi
BP13-055AA131CH113B	**2250.00**	0.55 kW	1400			1.1 cc			
BP13-075AA131CH113B	**2300.00**	0.75 kW	1410						

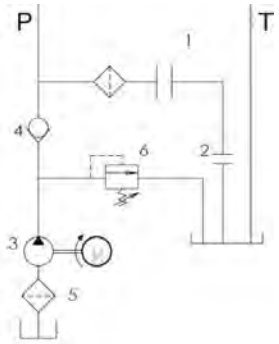

010

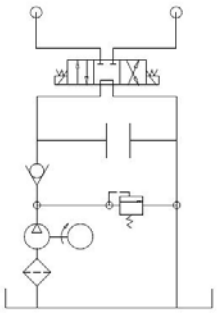

131

Double Acting supplied with 24v DC Coils

4 Pole Motor

Continuous Duty

NEW BP13 Series Power Unit - 415v, 0.25kW - 0.75kW

Part Number	List Price $	Power	RPM	Volts	Function	Pump	Ports	Tank Usable	Relief Set
BP13-025AC010H083B	**1750.00**	0.25 kW	1380	415v AC	P + T	0.8 cc	9/16" UNO	10 L	1600 psi
BP13-037AC010H083B	**1765.00**	0.37 kW							2500 psi
BP13-055AC010H113B	**1810.00**	0.55 kW	1400			1.1 cc			
BP13-075AC010H113B	**1950.00**	0.75 kW	1410						
BP13-025AC131CH083B	**2000.00**	0.25 kW	1380		D/A	0.8 cc			1600 psi
BP13-037AC131CH083B	**2015.00**	0.37 kW							2500 psi
BP13-055AC131CH113B	**2030.00**	0.55 kW	1400			1.1 cc			
BP13-075AC131CH113B	**2200.00**	0.75 kW	1410						

NEW BP13 Series Power Unit - 240v, 1.1kW - 3.7kW

Part Number	List Price $	Power	RPM	Volts	Function	Pump	Ports	Tank Usable	Relief Set
BP13-11AA010H213B	**2160.00**	1.1 kW	1410	240v AC	P + T	2.1 cc	9/16" UNO	10 L	2500 psi
BP13-15AA010H213B	**2300.00**	1.5 kW	1420						
BP13-22AA010H428B	**2570.00**	2.2 kW	1430			4.2 cc		18 L	
BP13-30AA010H584H	**2740.00**	3.0 kW	1440			5.8 cc			
BP13-37AA010H805H	**3100.00**	3.7 kW				8.0 cc		30 L	
BP13-11AA131CH213B	**2400.00**	1.1 kW	1410		D/A	2.1 cc		10 L	
BP13-15AA131CH213B	**2530.00**	1.5 kW	1420						
BP13-22AA131CH428B	**2820.00**	2.2 kW	1430			4.2 cc		18 L	
BP13-30AA131CH584H	**2985.00**	3.0 kW	1440			5.8 cc			
BP13-37AA131CH805H	**3355.00**	3.7 kW				8.0 cc		30 L	

NEW BP13 Series Power Unit - 415v, 1.1kW - 4kW

Part Number	List Price $	Power	RPM	Volts	Function	Pump	Ports	Tank Usable	Relief Set
BP13-11AC010H213B	**2080.00**	1.1 kW	1410	415v AC	P + T	2.1 cc	9/16" UNO	10 L	2500 psi
BP13-15AC010H213B	**2200.00**	1.5 kW	1420						
BP13-22AC010H428B	**2300.00**	2.2 kW	1430			4.2 cc		18 L	
BP13-30AC010H584H	**2480.00**	3.0 kW	1440			5.8 cc			
BP13-40AC010H805H	**2700.00**	4.0 kW				8.0 cc		30 L	
BP13-11AC131CH213B	**2350.00**	1.1 kW	1410		D/A	2.1 cc		10 L	
BP13-15AC131CH213B	**2400.00**	1.5 kW	1420						
BP13-22AC131CH428B	**2560.00**	2.2 kW	1430			4.2 cc		18 L	
BP13-30AC131CH5804H	**2600.00**	3.0 kW	1440			5.8 cc			
BP13-40AC131CH805H	**2950.00**	4.0 kW				8.0 cc		30 L	

Double Acting supplied with 24v DC Coils

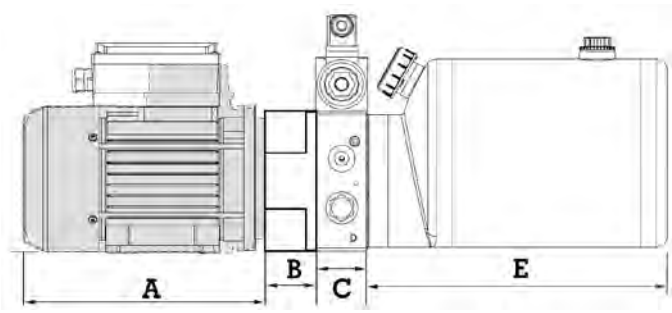

For tank dimensions (E) see page 33

Motor Size

Motor Power	A (240v)	A (415v)	B	C
	Dimension (mm)			
0.25 kW	230	210	58	43
0.37 kW	225	215		
0.55 kW	250	240		
0.75 kW			68	
1.1 kW	285	260		
1.5 kW	315	290		
2.2 kW	340	320	90	
3.0 kW	360			
3.7 kW	370	370		
4.0 kW	n/a	335		

NEW BP13 240v AC Electric Motors

Part Number	List Price $	Power	Voltage	Full Load Amps	IP	RPM	Frame	Shaft
EM1-4-0.25-14-71-B14	**325.00**	0.25 kW	240v AC	1.9 a	55	1320	71	14 mm
EM1-4-0.37-14-71-B14	**360.00**	0.37 kW		2.7 a		1380		
EM1-4-0.55-19-80-B14	**450.00**	0.55 kW		3.6 a		1400	80	19 mm
EM1-4-0.75-19-80-B14	**500.00**	0.75 kW		4.5 a		1410		
EM1-4-1.1-24-90-B14	**595.00**	1.1 kW		6.5 a			90	24 mm
EM1-4-1.5-24-90-B14	**720.00**	1.5 kW		8.7 a		1420		
EM1-4-2.2-28-100-B14	**925.00**	2.2 kW		12.1 a		1430	100	28 mm
EM1-4-3-28-100-B14	**1090.00**	3 kW		16.3 a		1440		
EM-4-3.7-28-100-B14	**1450.00**	3.7 kW		19.8 a				

Note: All motors up to 2.2kW fitted with manual reset overload

NEW BP13 415v AC Electric Motors

Part Number	List Price $	Power	Voltage	Full Load Amps	IP	RPM	Frame	Shaft
EM3-4-0.25-14-71-B14	**210.00**	0.25 kW	415v AC	0.75 a	55	1380	71	14 mm
EM3-4-0.37-14-71-B14	**230.00**	0.37 kW		1.03 a				
EM3-4-0.55-14-71-B14	**290.00**	0.55 kW		1.60 a		1400	80	19 mm
EM3-4-0.55-19-80-B14	**310.00**			1.63 a				
EM3-4-0.75-19-80-B14	**395.00**	0.75 kW		1.94 a		1410	90	24 mm
EM3-4-1.1-24-90-B14	**515.00**	1.1 kW		2.6 a				
EM3-4-1.5-24-90-B14	**595.00**	1.5 kW		3.4 a		1420		
EM3-4-2.2-24-90-B14	**705.00**	2.2 kW		5.1 a		1430		
EM3-4-2.2-28-100-B14	**755.00**			4.6 a			100	28 mm
EM3-4-3-28-100-B14	**830.00**	3.0 kW		6.3 a		1440		
EM3-4-4-28-112-B14	**1030.00**	4.0 kW		8.2 a				

NEW BP13 Vivoil Pumps

Part Number	List Price $	cc	Rated Pressure	Max / Min Speed
7P1644003	**510.00**	0.9	240 bar	700/6000 rpm
7P1744002	**510.00**	1.2	250 bar	
7P1844003	**510.00**	1.7		
7P2044002	**510.00**	2.2		
7P2144001	**510.00**	2.6		
7P2344002	**510.00**	3.2		
7P2544001	**510.00**	3.8		
7P2744001	**510.00**	4.3		
7P2944001	**530.00**	4.9		
7P3144002	**530.00**	5.9		700/5000 rpm
7P3244001	**530.00**	6.5		
7P3444003	**530.00**	7.8	220 bar	
7P3644001	**530.00**	9.8	181 bar	700/4000 rpm

Power Unit Nomenclature

Part #	Motor & Voltage	Valve	Valve Type	Suction	Pump CC	Tank	Special
	16DA	131	Z	H	21	2A	V

MOTOR	DESCRIPTION
03DA	350W/12VDC 1700rpm
03DB	350W/24VDC 1800rpm
08DA	800W/12VDC 3200rpm
08DB	800W/24VDC 3200rpm
16DA	1.6KW/12VDC 2600rpm
16DB	1.6KW/24VDC 2700rpm
25DA	2.5KW/12VDC 2400rpm
25DB	2.5KW/24VDC 3400rpm
30DA	3.0KW/12VDC 1850rpm
40DB	4.0KW/24VDC 2700rpm
15AA	1.1KW/415VAC 2800rpm
30AA	2.2KW/415VAC 2800rpm
40AC	3.0KW/415VAC 2800rpm
50AC	4.0KW/415VAC 2800rpm
60PE	6.0HP Petrol Electric start 3000rpm
60DE	6.7HP Diesel Electric start 2800rpm
Technical information - see page 28-30	

VALVE	DESCRIPTION
010	P & T
030	Single Acting
03M	Single Acting with override
131	1 x Double Acting (Cetop)
132	2 x Double Acting (Cetop)
132SW	2 x Double Acting (Sandwich)
133SW	3 x Double Acting (Sandwich)
134SW	4 x Double Acting (Sandwich)
135SW	5 x Double Acting (Sandwich)
136SW	6 x Double Acting (Sandwich)
Technical information - see pages 75-87	

VALVE TYPE	DESCRIPTION
Z	Closed Centre
C	Tandem Centre
H	Motor Spool
Y	A & B to T
S	Crossover S/A
U	Open Centre

SUCTION	DESCRIPTION
H	Horizontal Mount
V	Vertical Mount

PUMP	DESCRIPTION
037	0.37 cc
075	0.75 cc
08	0.8 cc
11	1.1 cc
16	1.6 cc
21	2.1 cc
27	2.7 cc
32	3.2 cc
37	3.7 cc
42	4.2 cc
48	4.8 cc
58	5.8 cc
70	7.0 cc
80	8.0 cc
Technical information - see page 30-31	

TANK	DESCRIPTION
1S	MS1AB 1L useable
2S	MS2AB 1.4L useable
4S	MS4AB 2.4L useable
0B	MT0AB 2.5L
0P	RP0AB 3.0L
0A	LS0AB 3.0L
6S	MS6AB 3.3L
1A	LS1AB 3.8L
2A	LS2AB 5.7L
2B	MT2AB 7.5L
3B	MT3AB 10L
4B	MT4AB 12L
5B	MT5AB 15L
8B	MT18AB 18L (for petrol/diesel)
1K	OTK012 21L (for petrol/diesel)
4H	HR4ABC 22L
5H	HR5ABC 30L
6H	HR6ABC 38L
MP	No Tank
MPR	No Tank No Relief
Technical information - see page 33	

SPECIAL	DESCRIPTION
MPR	Motor Pump with Relief Valve
MP	Motor Pump
SW	Sandwich Valve
V	Vivoil Pump
SWHP	Sandwich Valve Handpump
SWM	Sandwich Valve Manual Override
COV	CETOP Override
V	Vivoil Pump
Multiple special options separated by /	

Micro Power Unit - Max Pressure 3000 psi

Part Number	List Price $	Power	Volts	Function	Pump	Ports	Tank Usable	Relief Set
03DA010H0381S	**1082.00**	350 w	12v	P + T	0.38 cc	9/16" UNO	1.4 L	2500 psi
03DB010H0381S	**1082.00**		24v					
03DA030H0381S	**1133.00**		12v	S/A				
03DB030H0381S	**1133.00**		24v					
03DA131ZH0382S	**1391.00**		12v	D/A				
03DB131ZH0382S	**1391.00**		24v					

Micro Power Unit - Max Pressure 3000 psi

Part Number	List Price $	Power	Volts	Function	Pump	Ports	Tank Usable	Relief Set
08DA010H0751S	**1133.00**	800 w	12v	P + T	0.75 cc	9/16" UNO	1.4 L	2500 psi
08DB010H0751S	**1133.00**		24v					
08DA030H0751S	**1185.00**		12v	S/A				
08DB030H0751S	**1185.00**		24v					
08DA131ZH0752S	**1391.00**		12v	D/A				
08DB131ZH0752S	**1391.00**		24v					

010

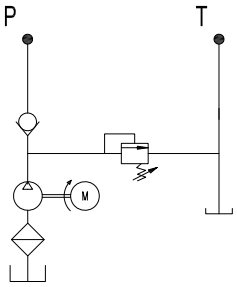

030

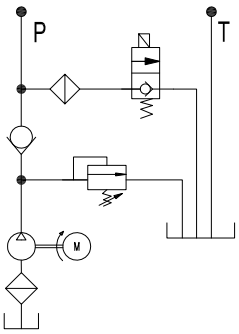

131

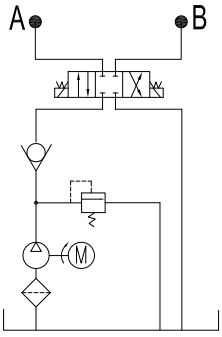

Intermittent use only

P & T Power Unit - Max Pressure 3000 psi

Part Number	List Price $	Power	Volts	Function	Pump	Ports	Tank Usable	Relief Set
16DA010H211A	**1082.00**	1.6 kW	12v	P + T ports only	2.1 cc	9/16" UNO	3.8 L	2500 psi
16DA010H212A	**1082.00**						5.7 L	
16DA010H212B	**1133.00**						7.5 L	
16DA010H213B	**1133.00**						10 L	
16DB010H211A	**1082.00**	2.2 kW	24v				3.8 L	
16DB010H212A	**1082.00**						5.7 L	
16DB010H212B	**1133.00**						7.5 L	
16DB010H213B	**1133.00**						10 L	

Other tank sizes available
See page 33

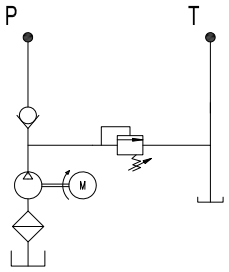

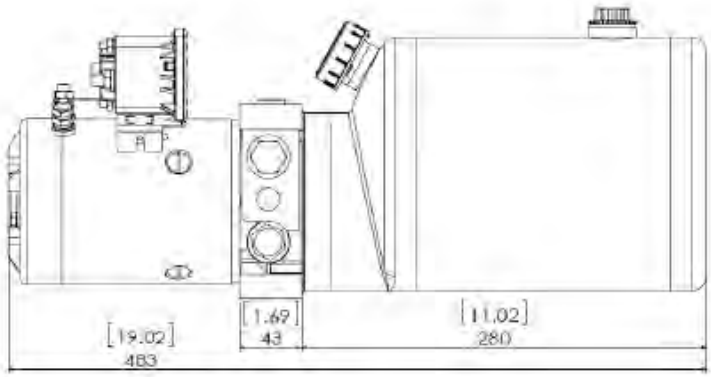

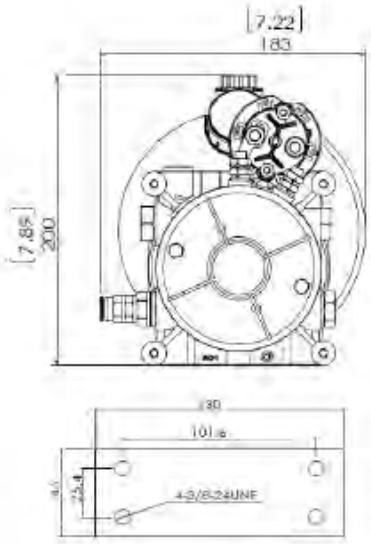

Intermittent use only

Overall Dimensions					
Tank Size	**3.8 L**	**5.7 L**	**7.5 L**	**10 L**	**15 L**
Length	483mm	553mm	483mm	540mm	713mm
Width	183mm				
Height	200mm				

Single Acting Power Unit - Max Pressure 3000 psi

Part Numbe	List Price $	Power	Volts	Function	Pump	Ports	Tank Usable	Relief Set
16DA030H211A	**1133.00**	1.6 kW	12v	Single acting	2.1 cc	9/16" UNO	3.8 L	2500 psi
16DA030H212A	**1133.00**						5.7 L	
16DA030H212B	**1185.00**						7.5 L	
16DA030H213B	**1185.00**						10 L	
16DB030H211A	**1133.00**	2.2 kW	24v				3.8 L	
16DB030H212A	**1133.00**						5.7 L	
16DB030H212B	**1185.00**						7.5 L	
16DB030H213B	**1185.00**						10 L	

Other tank sizes available
See page 33

Flow control cartridge can be fitted to centre block

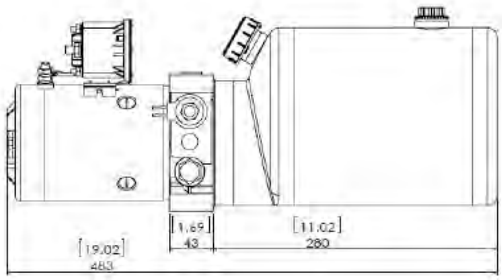

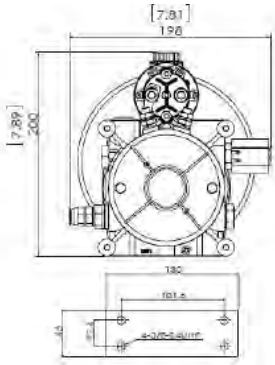

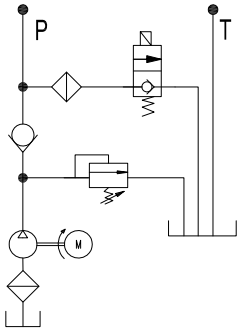

Overall Dimensions					
Tank Size	**3.8 L**	**5.7 L**	**7.5 L**	**10 L**	**15 L**
Length	483mm	553mm	483mm	540mm	713mm
Width	198mm				
Height	200mm				

Intermittent use only

Double Acting Power Unit - Max Pressure 3000 psi

Part Number	List Price $	Power	Volts	Function	Pump	Ports	Tank Usable	Relief Set
16DA131ZH211A	**1236.00**	1.6 kW	12v	D/A	2.1 cc	9/16" UNO	3.8 L	2500 psi
16DA131ZH212A	**1236.00**						5.7 L	
16DA131ZH212B	**1288.00**						7.5 L	
16DA131ZH213B	**1288.00**						10 L	
16DB131ZH211A	**1236.00**	2.2 kW	24v				3.8 L	
16DB131ZH212A	**1236.00**						5.7 L	
16DB131ZH212B	**1288.00**						7.5 L	
16DB131ZH213B	**1288.00**						10 L	

Other tank sizes available
See page 33

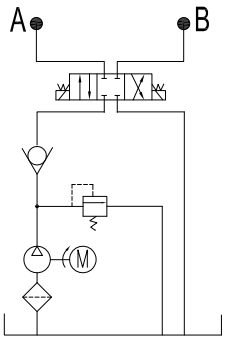

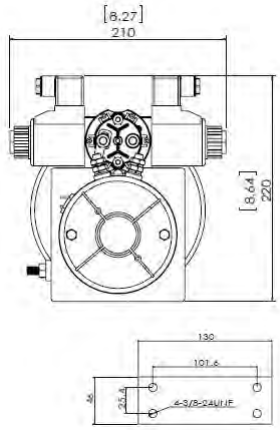

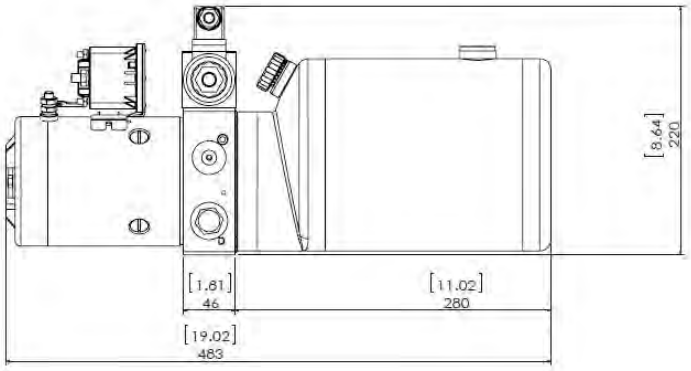

Intermittent use only

Overall Dimensions					
Tank Size	**3.8 L**	**5.7 L**	**7.5 L**	**10 L**	**15 L**
Length	483mm	553mm	483mm	540mm	713mm
Width	210mm				
Height	220mm				

2 x Double Acting Power Unit - Max Pressure 3000 psi

Part Number	List Price $	Power	Volts	Function	Pump	Ports	Tank Usable	Relief Set
16DA132ZH212B	**1700.00**	1.6 kW	12v	2 x D/A	2.1 cc	9/16" UNO	7.5 L	2500 psi
16DB132ZH212B	**1700.00**	2.2 kW	24v					

Other tank sizes available
See page 33

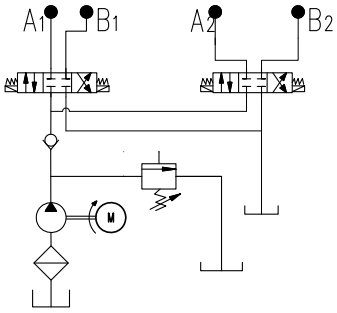

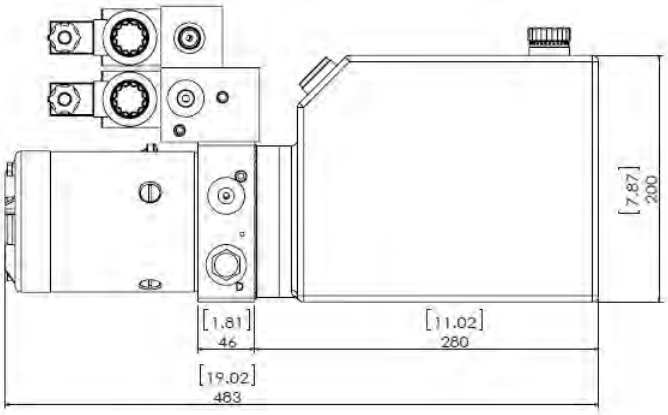

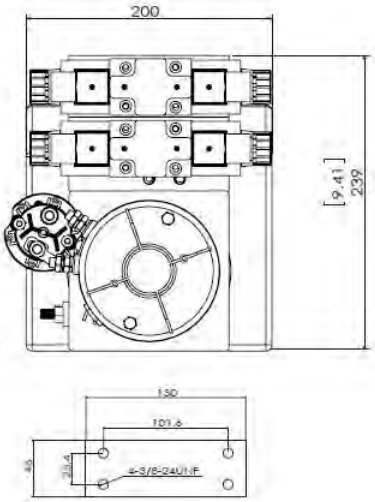

Overall Dimensions					
Tank Size	**3.8 L**	**5.7 L**	**7.5 L**	**10 L**	**15 L**
Length	483mm	553mm	483mm	540mm	713mm
Width	200mm				
Height	239mm				

Intermittent use only

High Power 2.5kW Unit - Max Pressure 3000 psi

Part Number	List Price $	Power	Volts	Function	Pump	Ports	Tank Usable	Relief Set
25DA010H321A	**1391.00**	2.5 kW	12v	P + T	3.2 cc	9/16" UNO	3.8 L	3000 psi
25DA030H321A	**1494.00**			S/A				
25DA131ZH321A	**1545.00**			D/A				
25DB010H321A	**1391.00**	2.8 kW	24v	P + T				
25DB030H321A	**1494.00**			S/A				
25DB131ZH321A	**1545.00**			D/A				

010

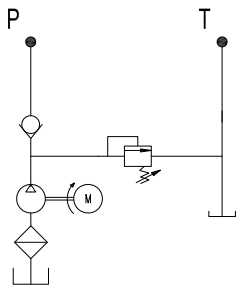

030

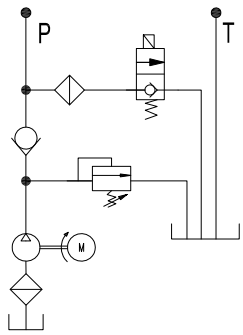

131

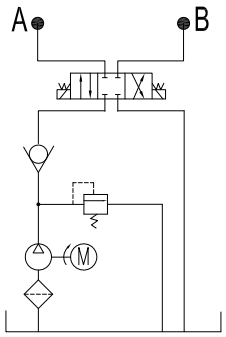

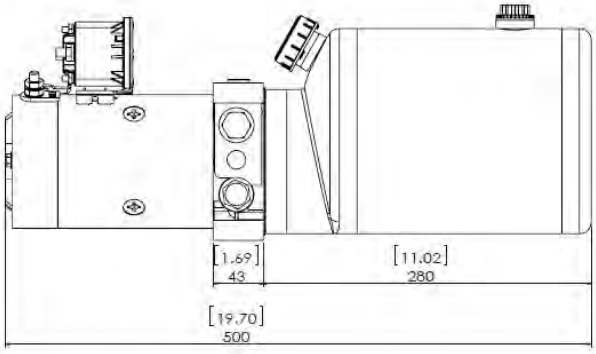

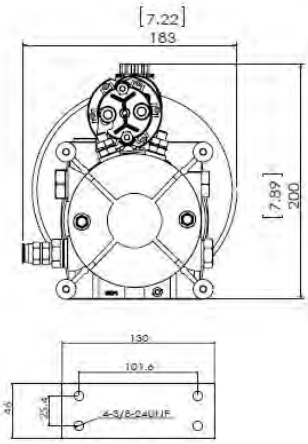

Intermittent use only

Dimension (mm)	DA010H	DB010H	DA030H	DB030H	DA131H	DB131H
Length	492	527	492	527	492	527
Width	183	183	198	198	210	210
Height	200	200	200	200	220	220

High Power 3kW Unit - Max Pressure 3000 psi

Part Number	List Price $	Power	Volts	Function	Pump	Ports	Tank Usable	Relief Set
30DA010H373B	2215.00	3.0 kW	12v	P + T	3.7 cc	9/16" UNO	10 L	2500 psi
30DA030H373B	2318.00			S/A				
30DA131ZH373B	2369.00			D/A				

Dimension	010	030	131
Length	622mm	622mm	644mm
Width	200mm	200mm	224mm
Height	231mm	231mm	210mm

010

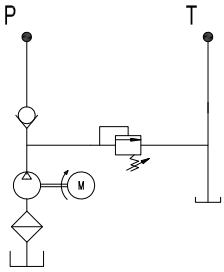

030

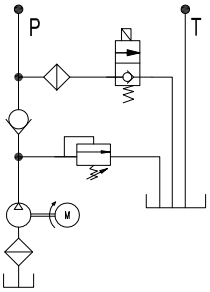

131

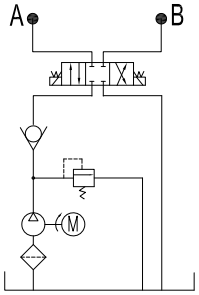

500 amp heavy duty start solenoid

Intermittent use only

High Power 4kW Unit - Max Pressure 3000 psi

Part Number	List Price $	Power	Volts	Function	Pump	Ports	Tank Usable	Relief Set
40DB010H423B	2369.00	4.0 kW	24v	P + T	4.2 cc	9/16" UNO	10 L	2500 psi
40DB030H423B	2472.00			S/A				
40DB131ZH423B	2575.00			D/A				

Dimension	010	030	131
Length	678mm	678mm	678mm
Width	200mm	200mm	210mm
Height	232mm	232mm	239mm

Hi-powered & cooled for longer run times

Intermittent use only

High Power 4kW Unit - Max Pressure 3000 psi

Part Number	List Price $	Power	Volts	Pump	Ports	Function
MPA025	**2369.00**	4.0 kW	24v	4.2 cc	3/8" BSPP	MP Unit

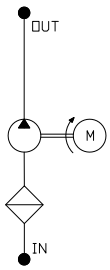

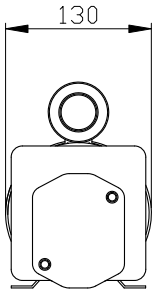

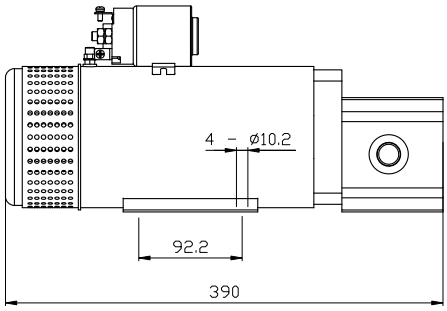

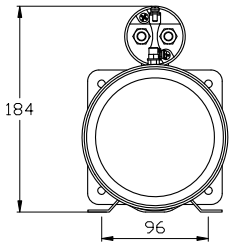

Intermittent use only

1.1kW Power Unit

Part Number	List Price $	Power	Volts	Function	Pump	Ports	Tank Usable	Relief Set
15AA010H112B	**1494.00**	1.1 kW	240v Coils 24v DC	P + T	1.1 cc	9/16" UNO	7.5 L	2500 psi
15AA131CH112B	**1648.00**			D/A				

Dimension	010	131
Length	590mm	590mm
Width	200mm	224mm
Height	238mm	245mm

All AC units supplied with standard 24v DC coils unless specified

Intermittent use only

010

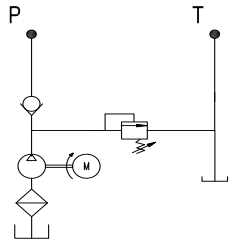

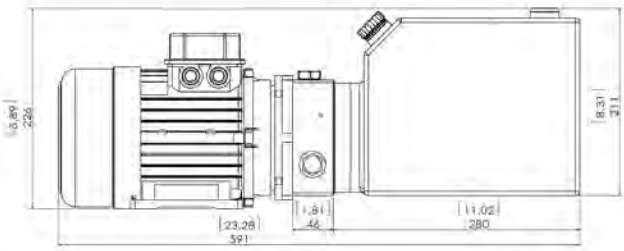

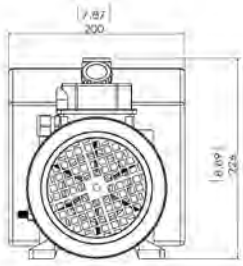

2.2kW Power Unit

Part Number	List Price $	Power	Volts	Function	Pump	Ports	Tank Usable	Relief Set
30AA010H213B	**1803.00**	2.2 kW	240v Coils 24v DC	P + T	2.1 cc	9/16" UNO	10 L	2500 psi
30AA131CH213B	**1957.00**			D/A				

Dimension	010	131
Length	689mm	689mm
Width	200mm	210mm
Height	256mm	256mm

All AC units supplied with standard 24v DC coils unless specified

Intermittent use only

131

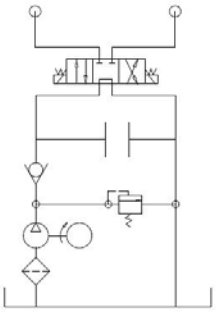

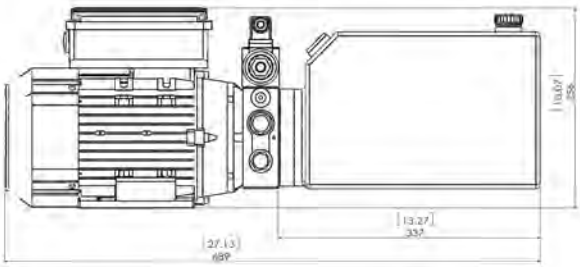

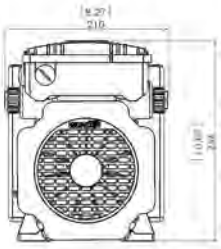

1.1kW Power Unit

Part Number	List Price $	Power	Volts	Function	Pump	Ports	Tank Usable	Relief Set
15AC010H112B	**1391.00**	1.1 kW	415v Coils 24v DC	P + T	1.1 cc	9/16" UNO	7.5 L	2500 psi
15AC131CH112B	**1545.00**			D/A				

All AC units supplied with standard 24v DC coils unless specified

Intermittent use only

Dimension	010	131
Length	591mm	591mm
Width	200mm	210mm
Height	226mm	245mm

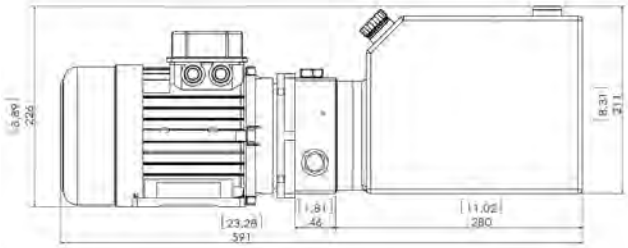

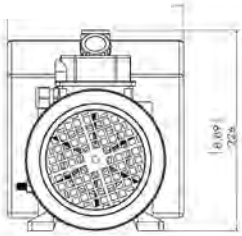

010

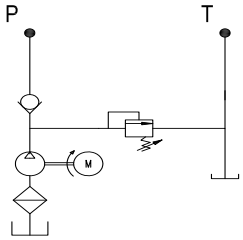

2.2kW Power Unit

Part Number	List Price $	Power	Volts	Function	Pump	Ports	Tank Usable	Relief Set
30AC010H213B	**1854.00**	2.2 kW	415v Coils 24v DC	P + T	2.1 cc	9/16" UNO	10 L	2500 psi
30AC131CH213B	**1957.00**			D/A				

All AC units supplied with standard 24v DC coils unless specified

Intermittent use only

Dimension	010	131
Length	689mm	689mm
Width	200mm	210mm
Height	255mm	255mm

131

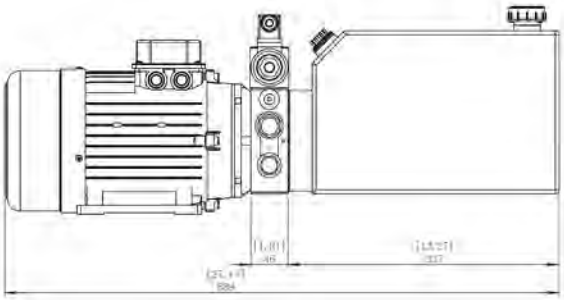

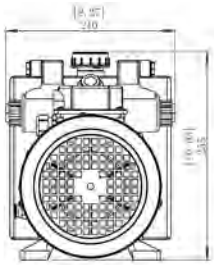

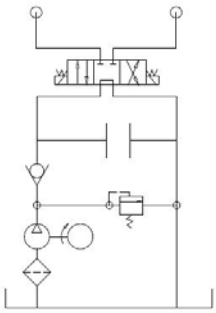

3.0kW Power Unit

Part Number	List Price $	Power	Volts	Function	Pump	Ports	Tank Usable	Relief Set
40AC010H273B	**1854.00**	3 kW	415v Coils 24v DC	P + T	2.7 cc	9/16" UNO	10 L	2500 psi
40AC131CH273B	**2009.00**			D/A				

Dimension	010	131
Length	703mm	703mm
Width	200mm	216mm
Height	280mm	258mm

All AC
st

In

010

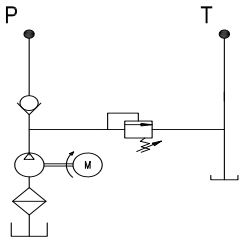

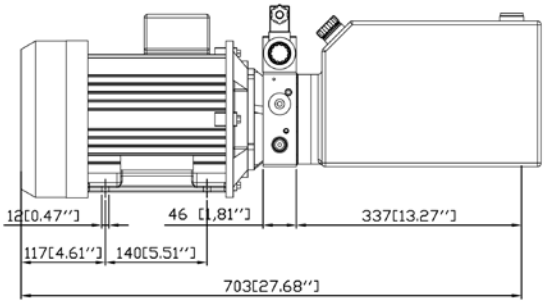

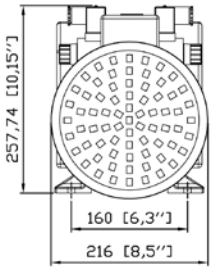

4.0kW Power Unit

Part Number	List Price $	Power	Volts	Function	Pump	Ports	Tank Usable	Relief Set
50AC010H373B	**2009.00**	4 kW	415v Coils 24v DC	P + T	3.7 cc	9/16" UNO	10 L	2500 psi
50AC131CH373B	**2163.00**			D/A				

Dimension	010	131
Length	739mm	739mm
Width	200mm	210mm
Height	264mm	263mm

All AC
st

In

131

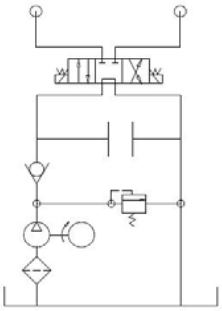

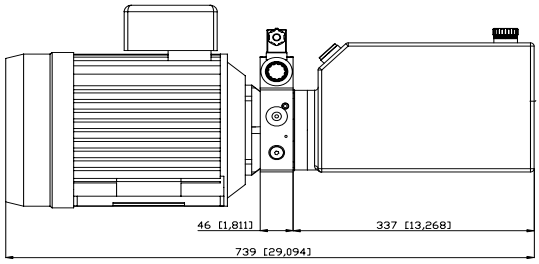

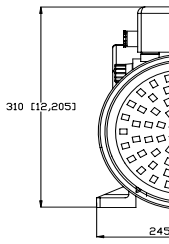

6HP Engine Power Unit

Part Number	List Price $	Power	Fuel	Function	Pump	Tank Usable	Relief Set
60PE010H278B	3451.00	6 hp	Unleaded	P + T	2.7 cc	18 L	2500 psi
60PE131CH278K	3832.00			D/A			
60DE010H278B	7400.00	6.7 hp	Diesel	P + T			
60DE131CH278K	7847.00			D/A			
GEU01-001	2318.00	Power unit kit for DIY engine (P + T)					
GEU13-001	2524.00	Power unit kit for DIY engine (with Cetop)					

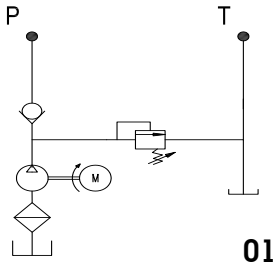

010

Net power (petrol)

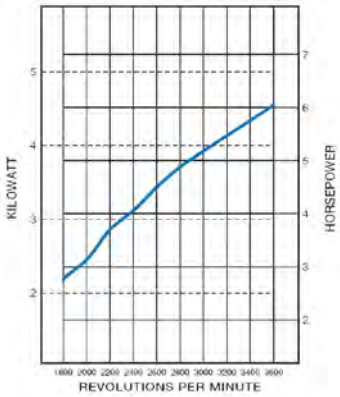

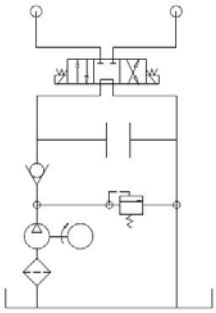

131

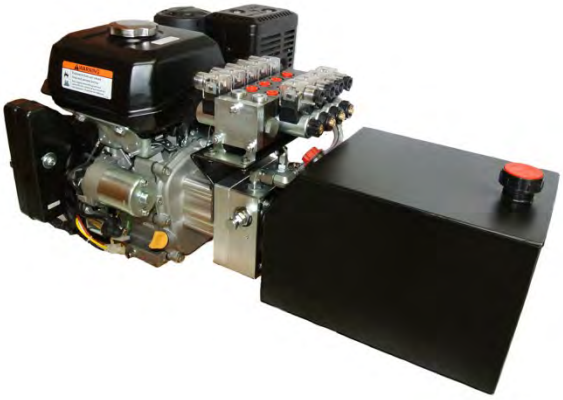

Torque Curves (diesel)

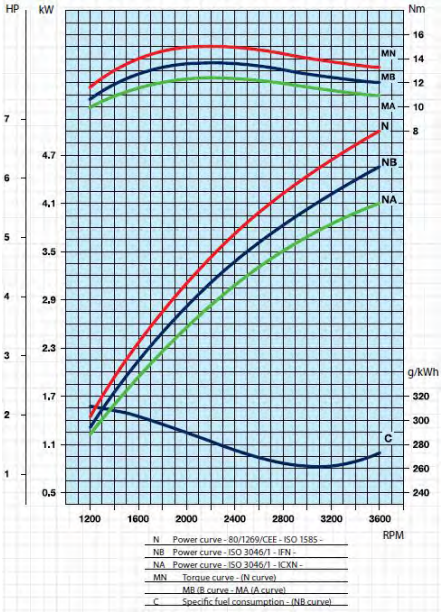

Continuous duty

Tank & pump changeable with others in range

Multiple valve additions available

Larger motor pump units available

DC Motors

Part Number	List Price $	Power	Voltage	Rated Current	IP	Rated Speed	Duty Cycle S2	Duty Cycle S3
235A-FS-A	**366.00**	350 w	12v	40a	54	1700	2 min	3%
235B-FS-A	**366.00**		24v	25a		1800		
308AS-2-A	**402.00**	800 w	12v	105a		3200		
308BS-2-A	**402.00**		24v	50a				
416A-2	**536.00**	1.6 kW	12v	190a		2600		8%
422B-2	**536.00**	2.2 kW	24v	120a		2700		
425A-2	**608.00**	2.5 kW	12v	280a		2400		
428B-2	**721.00**	2.8 kW	24v	150a		3400		
530A-F	**1288.00**	3.0 kW	12v	450a		1850	5 min	9%
540B-2-J	**1524.00**	4.0 kW	24v	215a		2700	8 min	15%

Start Solenoids

Part Number	List Price $	Rated Amp	Voltage	Duty Max	Power Unit
SR3A2	**144.00**	250a	12v	6 minutes	1.6, 2.5, 4.0 kW DC 12v
SR3B2	**144.00**		24v		1.6, 2.5, 4.0 kW DC 24v
SR5A2	**258.00**	400a	12v		3.0 kW DC 12v

AC Motors

Part Number	List Price $	Power	Voltage	Amp Draw	IP	Speed	Frame
E11S-2-80-B34	**783.00**	1.1 kW	220/240v	6.7a	54	2800	80
E22S-2-90L-B34	**783.00**	2.2 kW		9.7a			90
E11T-2-80-B34	**567.00**	1.1 kW	380/415v	2.49a			80
E22T-2-90L-B34	**685.00**	2.2 kW		4.67a			90
E30T-2-100L-B34	**1082.00**	3.0 kW		6.22a			100
E40T-2-112M-B34	**1380.00**	4.0 kW		10.5a			112

240v

415v

Premium Gear Pumps ("Little Kuma")

Premium gear pumps, made in Italy by Vivoil

Part Number	List Price $	CC	Maximum Pressure	Min Speed	Max Speed
B1P1643HZZB	**294.00**	0.91	240 bar	700 rpm	4000 rpm
B1P1743HZZB	**294.00**	1.17	250 bar		
B1P1843HZZB	**252.00**	1.56			
B1P2043HZZB	**252.00**	2.08			
B1P2143HZZB	**252.00**	2.60			
B1P2343HZZB	**252.00**	3.12	220 bar		
B1P2543HZZB	**252.00**	3.64			
B1P2743HZZB	**252.00**	4.16	200 bar		
B1P3143HZZB	**252.00**	5.85	170 bar		3500 rpm
B1P3443HZZB	**252.00**	7.80	110 bar		

For power unit premium gear pump change add to list price:
$85 (0.91cc - 1.17cc) or
$125 (1.56cc - 7.8cc)

Standard Gear Pumps - pressure balanced for intermittent duty (electric)

Part Number	List Price $	CC	Rated Pressure	Max/Min Speed
G110	**216.00**	1.1	210 bar	6000/600 rpm
G160	**216.00**	1.6		
G210	**216.00**	2.1		
G270	**216.00**	2.7		
G320	**216.00**	3.2	190 bar	5000/600 rpm
G370	**216.00**	3.7		4500/600 rpm
G420	**216.00**	4.2		4000/600 rpm
G480	**216.00**	4.8	170 bar	3500/600 rpm
G580	**216.00**	5.8		3000/600 rpm
G800	**216.00**	8.0	110 bar	2100/600 rpm

Standard Gear Pumps - pressure balanced for continuous duty (with keyed shaft)

Part Number	List Price $	CC	Rated Pressure	Max/Min Speed
G110S-S1	**330.00**	1.1	210 bar	6000/600 rpm
G210S-S1	**330.00**	2.1		
G270S-S1	**330.00**	2.7		
G380S-S1	**330.00**	3.8	190 bar	4500/600 rpm
G420S-S1	**330.00**	4.2		4000/600 rpm
G480S-S1	**330.00**	4.8	170 bar	3500/600 rpm
G580S-S1	**330.00**	5.8		3000/600 rpm
G800S-S1	**330.00**	8.0	110 bar	2100/600 rpm

For power unit standard gear pump change, add $50 to list price

Power Unit Mount

Part Number	List Price $	Description
PUMT	**41.00**	Suits all power units with 130mm centre manifold

Tank Breather

Part Number	List Price $	Description
TKBR	**21.00**	Tank Breather 3/4" NPT

Tank Port Plug

Part Number	List Price $	Description
TKBP	**10.00**	Tank Plug 3/4" NPT

Power Unit Flange

Part Number	List Price $	Description
FLST120	**41.00**	Weld flange for power unit mount

Power Unit Dust Cover

Part Number	List Price $	Description
DMC01	**41.00**	DC power unit dust cover

Solenoids

Part Number	List Price $	Voltage	Amp Draw	Core Size	Length	Connector
S2D12-08	**43.00**	12v DC	1.5a	13.3mm	37.5mm	2 wire
S2D24-08	**43.00**	24v DC	0.75a			
D1D12-08	**57.00**	12v DC	1.5a			3 pin DIN plug
D1D24-08	**57.00**	24v DC	0.75a			
D1A220-08	**57.00**	220v AC	0.08a			

Tanks - MS Series - Steel

Part Number	List Price $	Usable Litres	Length	Cylinder Diameter
MS1AB	**113.00**	1 L	160mm	122mm
MS2AB	**118.00**	1.4 L	200mm	
MS4AB	**129.00**	2.4 L	300mm	
MS6AB	**134.00**	3.3 L	400mm	

Tanks - LS Series - Steel

Part Number	List Price $	Usable Litres	Length	Cylinder Diameter
LS0AB	**103.00**	3.0 L	240mm	177mm
LS1AB	**124.00**	3.8 L	280mm	
LS2AB	**129.00**	5.7 L	350mm	

Tanks - MT Series - Steel

Part Number	List Price $	Usable Litres	Length	Width	Height
MT0AB	**129.00**	2.5 L	160mm	140mm	220mm
MT2AB	**149.00**	7.5 L	280mm	200mm	200mm
MT3AB	**155.00**	10 L	335mm		
MT4AB	**160.00**	12 L	395mm		
MT5AB	**175.00**	15 L	510mm		
MT6AB	**216.00**	19 L	625mm		
MT18AB	**330.00**	18 L	300mm	280mm	300mm

Tanks - HR Series - Steel

Part Number	List Price $	Usable Litres	Length	Width	Height
HR4ABC	**216.00**	22 L	380mm	250mm	300mm
HR5ABC	**263.00**	30 L	500mm		
HR6ABC	**304.00**	38 L	600mm		

Tanks - RP Series - Poly

Part Number	List Price $	Usable Litres	Length	Width	Height
RP0AB	**72.00**	2.3 L	198mm	173mm	173mm
RP2AB	**77.00**	6 L	332mm		

Pendant Controller Single Acting

Part Number	List Price $	Buttons	Function	Cord	IP Rating	Voltage	Connector	E-Stop
KCB21-03	**82.00**	2	Single Acting	3 mtr	55	5v - 48v	No	No

Note: Multi-funtion pendants can be converted to single-acting on request

Pendant Controller Double Acting

Part Number	List Price $	Buttons	Function	Cord	IP Rating	Voltage	Connector	E-Stop
KCB22-03	**93.00**	2	Double Acting	3 mtr	55	5v - 48v	No	No
KCB22-10	**124.00**			10 mtr				
KCB42-05	**155.00**	4		5 mtr				
KCB62-05	**227.00**	6						

Pendant Controller with E-Stop

Part Number	List Price $	Buttons	Function	Cord	IP Rating	Voltage	Connector	E-Stop
KCB32E-03	**144.00**	2	Double Acting	3 mtr	55	5v - 48v	No	Yes
KCB52E-05	**196.00**	4		5 mtr				
KCB72E-05	**268.00**	6						

Pendant Controller Quick Connect

Part Number	List Price $	Buttons	Function	Cord	IP Rating	Voltage	Connector	E-Stop
KCB21C-03	**134.00**	2	Single Acting	3 mtr	55	5v - 48v	Yes	No
KCB22C-03C	**155.00**		Double Acting					

All pendant controllers for low-voltage use only

Pendant Holsters

Part Number	List Price $	Description
KCB-BK	**31.00**	For use with all KCB pendants

NEW Wireless Pendant Controllers

Part Number	List Price $	Switch	Available Ouputs	Available Relays	Voltage	Transmitter Power Supply	Transmitter Size	Receiver Size
HN-A3100	**1980.00**	Single step	8	10	9-36v DC	3 x AAA batteries	180x65x50 mm	260x280x80 mm
HN-13100AB	**1980.00**		14					
HN-A4100	**2220.00**		10	15				
HN-4100AB	**2220.00**		18				220x65x50 mm	
HN-A4200	**2340.00**	Two Step	20	20				
HN-A4200AB	**2340.00**		40					

- *A & B function allows switching transmitter from one bank of relays to another utilising the same buttons*
- *LED indicator shows which system is in use*
- *Frequency 915.00 > 928.00 MHz*
- *Wiring harness as standard*
- *Plug and play wiring looms available on request (additional cost applies)*

Controllers can be programmed at Hydraulics Network to achieve different requirements.

NEW Replacement Transmitters

Part Number	List Price $	Switch	Transmitter Power Supply	Transmitter Size
HN-TA3100	**990.00**	Single Step	3 x AAA batteries	180x65x50 mm
HN-TA4100	**1110.00**			220x65x50 mm
HN-TA4200	**1170.00**	Two Step		

NEW Replacement Parts

Part Number	List Price $	Description
HN-EMGSTP	**150.00**	Emergency stop Replacement
HN-IKEY	**120.00**	Transmitter IKEY Replacement

We highly recommend that all wireless remotes be fitted with an isolation switch

Wireless Pendant Controllers

Part Number	List Price $	Voltage	Description
V6PR-4	**1689.00**	12v or 24v compatible	Remote control set with override pad on receiver 4 button transmitter
V6PR-6	**1689.00**		Remote control set with override pad on receiver 6 button transmitter
V6HS-4	**494.00**		4 button replacement transmitter
V6HS-6	**494.00**		6 button replacement transmitter

- *Wiring harness as standard*
- *Plug and play wiring looms available on request (additional cost applies)*

Controllers can be programmed at Hydraulics Network to achieve different requirements.

DIN Plugs

Part Number	List Price $	Description	DIN Size	Terminals	Body	LED
DP-IP65-AC/DC-IND	**16.00**	1-250V AC+DC, IP65	Industrial	3	Black	Yes
DP-IP67-AC/DC-250	**16.00**	1-250V AC+DC, IP67	DIN 43650-A (ISO 4400)			
DP-IP67-AC/DC-38	**16.00**	1-38V AC+DC, IP67				
DP-IP67-AC/DC-3M	**33.00**	1-38V AC+DC, 3m Cable, IP67				
DP-LED-AC	**10.00**	AC			Clear	
DP-LED-DC	**10.00**	DC				
DP-REC-LV	**27.00**	Rectifier AC to DC (1-48v)				
DP-REC	**27.00**	Rectifier AC to DC (70-250v)			Black	
YLMB8ESN002	**21.00**	4 pin		4		No