CATFORD ENGINEERING PRODUCTS

Jamestown
SA 5491

All Prices Excluding GST

Phone: 0418 641 566

www.catford.com.au sales@catford.com.au

Hydraulic Cylinders

*TAG Cylinders *Short Closed Length *Toplink
*Special Length *Log Splitter *Chute Jack
*Landing Legs *Phasing *Clevises *Pins
*Plugs & Breathers *Whoa Stops

Lot 25, Mannanarie Road, Jamestown, South Australia 5491

PO Box 178, Jamestown, South Australia 5491

0418 641 566

sales@catford.com.au

Due to fluctuations in the Australian dollar and the economic climate, please be advised that all prices are subject to change.
Please contact us to confirm pricing.

All prices stated within are exclusive of GST
(All prices are correct as of January 1st 2021, but Catford Engineering reserve the right to change these prices without notice)

Hydraulic Cylinders

CATFORD ENGINEERING PRODUCTS

Jamestown
SA 5491

Phone: 0418 641 566
www.catford.com.au sales@catford.com.au

AG Cylinders 1.5" Bore	254
AG Cylinders 2.0" Bore	255
AG Cylinders 2.5" Bore	256
AG Cylinders 3.0" Bore	257
AG Cylinders 3.5" Bore	258
AG Cylinders 4.0" Bore	259
AG Cylinders 5.0" Bore	260
AG Toplink Cylinders 2.5" Bore	261
Phasing Cylinders	262
Short Closed Length Cylinders	264
Special Length Cylinders	264
Landing Legs	265
Chute Jack Cylinders	265
Cylinder Attachments	266
Cmmon Swivel Foot	267
Whoa Stop Cylinder Stroke Control Segments	267
Cylinder Pins, Plugs & Breathers	268
Cylinder Seal Kits	268

WARNING: Hydraulic cylinders without a hose burst valve, pilot operated check valve or counter balance valve directly mounted to the cylinder will not meet Australian Standard AS1418.8, nor occupational health & safety rules.

AG Cylinders - 1.5" bore

AUSTRALIAN MADE

Part Number	List Price $	Stroke	Closed		Open		Description
			Inch	mm	Inch	mm	
TAG 1502D	**438.00**	2"	11.5"	292.1	13.5"	342.9	Maximum Pressure: 3500psi Ports: 9/16" UNO Pins: 3/4" pins
TAG 1504D	**438.00**	4"	13.5"	342.9	17.5"	444.5	
TAG 1506D	**438.00**	6"	15.5"	393.7	21.5"	546.1	
TAG 1508D	**438.00**	8"	17.5"	444.5	25.5"	647.7	
TAG 1510D	**459.00**	10"	19.5"	495.3	29.5"	749.3	
TAG 1512D	**480.00**	12"	21.5"	546.1	33.5"	850.9	
TAG 1514D	**523.00**	14"	23.5"	596.9	37.5"	952.5	
TAG 1516D	**523.00**	16"	25.5"	647.7	41.5"	1054.1	
TAG 1518D	**544.00**	18"	27.5"	698.5	45.5"	1155.7	
TAG 1520D	**566.00**	20"	29.5"	749.3	49.5"	1257.3	
TAG 1524D	**609.00**	24"	33.5"	850.9	57.5"	1460.5	
TAG 1530D	**672.00**	30"	39.5"	1003.3	69.5"	1765.3	
TAG 1536D	**736.00**	36"	45.5"	1155.7	81.5"	2070.1	
TAG 1548D	**865.00**	48"	57.5"	1460.5	105.5"	2679.7	

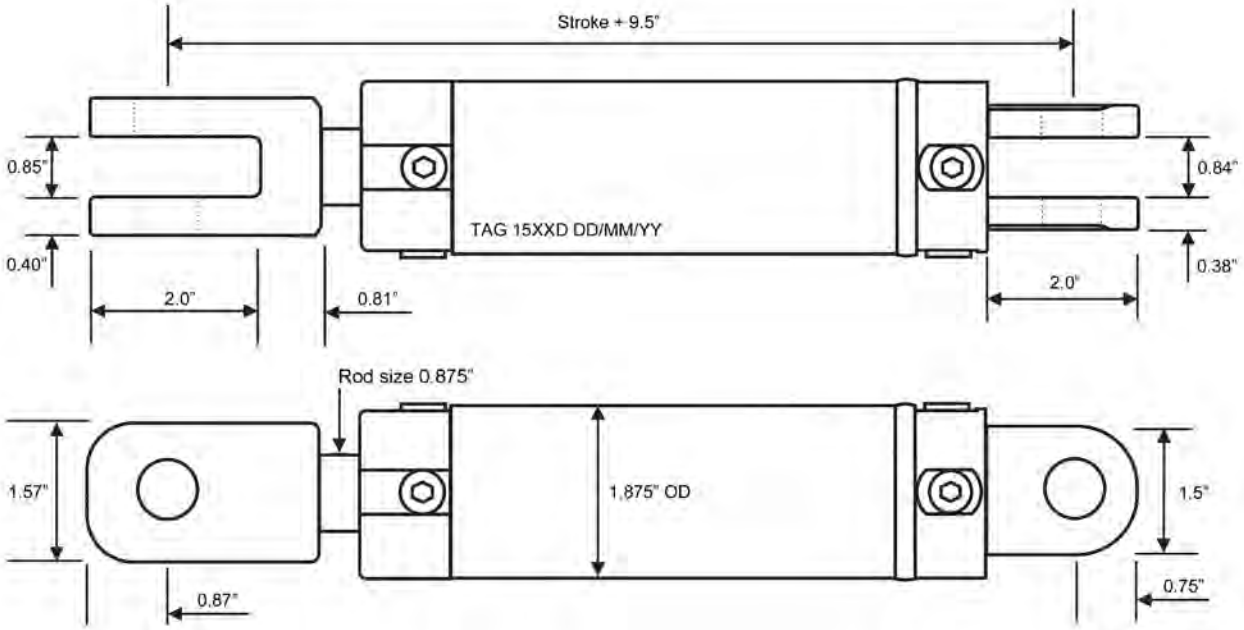

AUSTRALIAN MADE / 2 YEAR WARRANTY
DATED SERIAL NUMBER / DUAL PORT

WARNING: Hydraulic cylinders without a hose burst valve, pilot operated check valve or counter balance valve directly mounted to the cylinder will not meet Australian Standard AS1418.8, nor occupational health & safety rules.

Part Number	List Price $	Stroke	Closed		Open		Description
			Inch	mm	Inch	mm	
TAG 2002D	**413.00**	2"	14.25"	361.95	16.25"	412.75	Maximum Pressure: 3500psi Ports: 9/16" UNO Pins: 1" pins
TAG 2004D	**413.00**	4"	16.25"	412.75	20.25"	514.35	
TAG 2006D	**413.00**	6"	18.25"	463.55	24.25"	615.95	
TAG 2008D	**413.00**	8"	20.25"	514.35	28.25"	717.55	
TAG 2010D	**436.00**	10"	22.25"	565.15	32.25"	819.15	
TAG 2012D	**458.00**	12"	24.25"	615.95	36.25"	920.75	
TAG 2014D	**483.00**	14"	26.25"	666.75	40.25"	1022.35	
TAG 2016D	**506.00**	16"	28.25"	717.55	44.25"	1123.95	
TAG 2018D	**524.00**	18"	30.25"	768.35	48.25"	1225.55	
TAG 2020D	**559.00**	20"	32.25"	819.15	52.25"	1327.15	
TAG 2022D	**593.00**	22"	34.25"	869.95	56.25"	1428.75	
TAG 2024D	**595.00**	24"	36.25"	920.75	60.25"	1530.35	
TAG 2026D	**669.00**	26"	38.25"	971.55	64.25"	1631.95	
TAG 2028D	**676.00**	28"	40.25"	1022.35	68.25"	1733.55	
TAG 2030D	**679.00**	30"	42.25"	1073.15	72.25"	1835.15	
TAG 2036D	**732.00**	36"	48.25"	1225.55	84.25"	2139.95	
TAG 2042D	**893.00**	42"	54.25"	1377.95	96.25"	2444.75	
TAG 2048D	**893.00**	48"	60.25"	1530.35	108.25"	2749.55	
TAG 2054D	**1010.00**	54"	66.25"	1682.75	120.25"	3054.35	

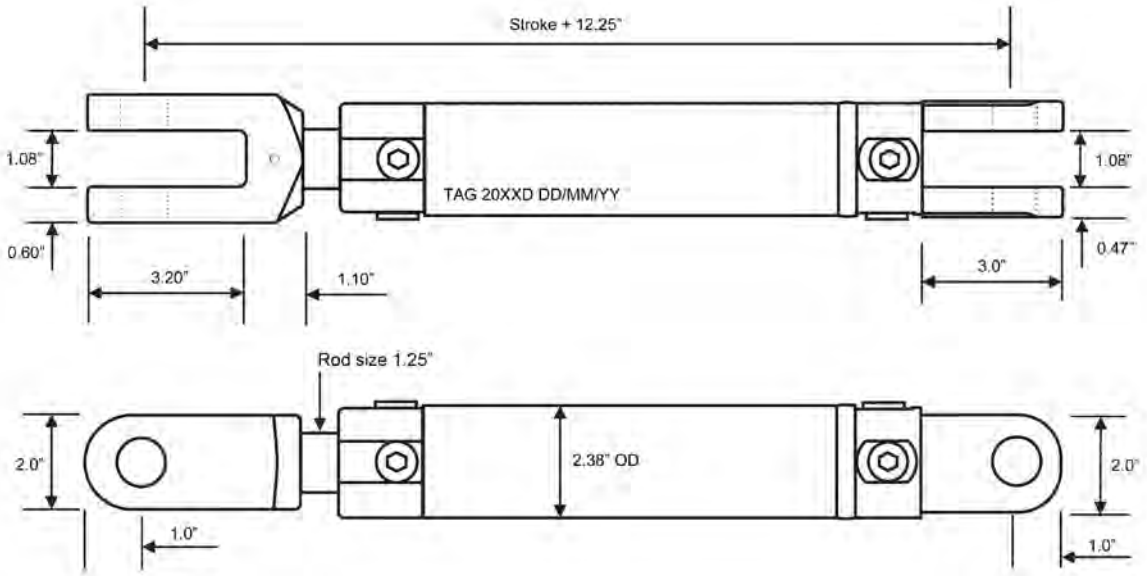

AUSTRALIAN MADE / 2 YEAR WARRANTY
DATED SERIAL NUMBER / DUAL PORT

WARNING: Hydraulic cylinders without a hose burst valve, pilot operated check valve or counter balance valve directly mounted to the cylinder will not meet Australian Standard AS1418.8, nor occupational health & safety rules.

AG Cylinders - 2.5" bore

AUSTRALIAN MADE

Part Number	List Price $	Stroke	Closed		Open		Description
			Inch	mm	Inch	mm	
TAG 2504D	**416.00**	4"	16.25"	412.75	20.25"	514.35	Maximum Pressure: 3500psi Ports: 3/4" UNO Pins: 1" pinsT
TAG 2506D	**416.00**	6"	18.25"	463.55	24.25"	615.95	
TAG 2508D	**416.00**	8"	20.25"	514.35	28.25"	714.55	
TAG 2510D	**438.00**	10"	22.25"	565.15	32.25"	819.15	
TAG 2512D	**460.00**	12"	24.25"	615.95	36.25"	920.75	
TAG 2514D	**483.00**	14"	26.25"	666.75	40.25"	1022.25	
TAG 2516D	**506.00**	16"	28.25"	717.55	44.25"	1123.25	
TAG 2518D	**528.00**	18"	30.25"	768.35	48.25"	1225.55	
TAG 2520D	**562.00**	20"	32.25"	819.15	52.25"	1327.15	
TAG 2522D	**595.00**	22"	34.25"	869.95	56.25"	1428.75	
TAG 2524D	**595.00**	24"	36.25"	920.75	60.25"	1530.35	
TAG 2526D	**679.00**	26"	38.25"	971.55	64.25"	1631.95	
TAG 2528D	**679.00**	28"	40.25"	1022.25	68.25"	1733.55	
TAG 2530D	**679.00**	30"	42.25"	1073.15	72.25"	1835.15	
TAG 2536D	**735.00**	36"	48.25"	1225.55	84.25"	2139.95	
TAG 2542D	**895.00**	42"	54.25"	1377.95	96.25"	2444.75	
TAG 2548D	**895.00**	48"	60.25"	1530.35	108.25"	2749.55	
TAG 25-1500D	**1108.00**	1500mm	71.30"	1811.15	130.36"	3311.15	
TAG 25-2000D	**2117.00**	2000mm	90.98"	2311.1	169.73"	4311.15	
TAG 25-2500D	**2293.00**	2500mm	110.67"	2811.15	209.10"	5311.15	

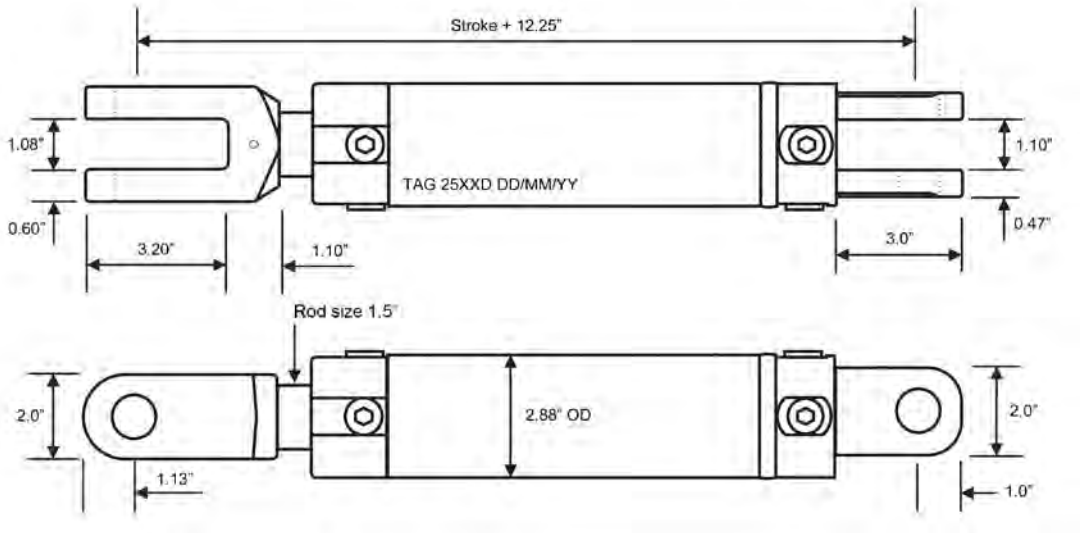

AUSTRALIAN MADE / 2 YEAR WARRANTY
DATED SERIAL NUMBER / DUAL PORT

WARNING: Hydraulic cylinders without a hose burst valve, pilot operated check valve or counter balance valve directly mounted to the cylinder will not meet Australian Standard AS1418.8, nor occupational health & safety rules.

Part Number	List Price $	Stroke	Closed		Open		Description
			Inch	mm	Inch	mm	
TAG 3004D	**485.00**	4"	16.25"	412.75	20.25"	514.35	Maximum Pressure: 3500psi Ports: 3/4" UNO Pins: 1" pins
TAG 3006D	**485.00**	6"	18.25"	463.55	24.25"	615.95	
TAG 3008D	**485.00**	8"	20.25"	514.35	28.25"	714.55	
TAG 3010D	**512.00**	10"	22.25"	565.15	32.25"	819.15	
TAG 3012D	**539.00**	12"	24.25"	615.95	36.25"	920.75	
TAG 3014D	**620.00**	14"	26.25"	666.75	40.25"	1022.25	
TAG 3016D	**620.00**	16"	28.25"	717.55	44.25"	1123.25	
TAG 3018D	**620.00**	18"	30.25"	768.35	48.25"	1225.55	
TAG 3020D	**698.00**	20"	32.25"	819.15	52.25"	1327.15	
TAG 3022D	**698.00**	22"	34.25"	869.95	56.25"	1428.75	
TAG 3024D	**698.00**	24"	36.25"	920.75	60.25"	1530.35	
TAG 3026D	**778.00**	26"	38.25"	971.55	64.25"	1631.95	
TAG 3028D	**778.00**	28"	40.25"	1022.35	68.25"	1733.55	
TAG 3030D	**778.00**	30"	42.25"	1073.15	72.25"	1835.15	
TAG 3036D	**859.00**	36"	48.25"	1225.55	84.25"	2139.95	
TAG 3042D	**1019.00**	42"	54.25"	1377.95	96.25"	2444.75	
TAG 3048D	**1019.00**	48"	60.25"	1530.35	108.25"	2749.55	

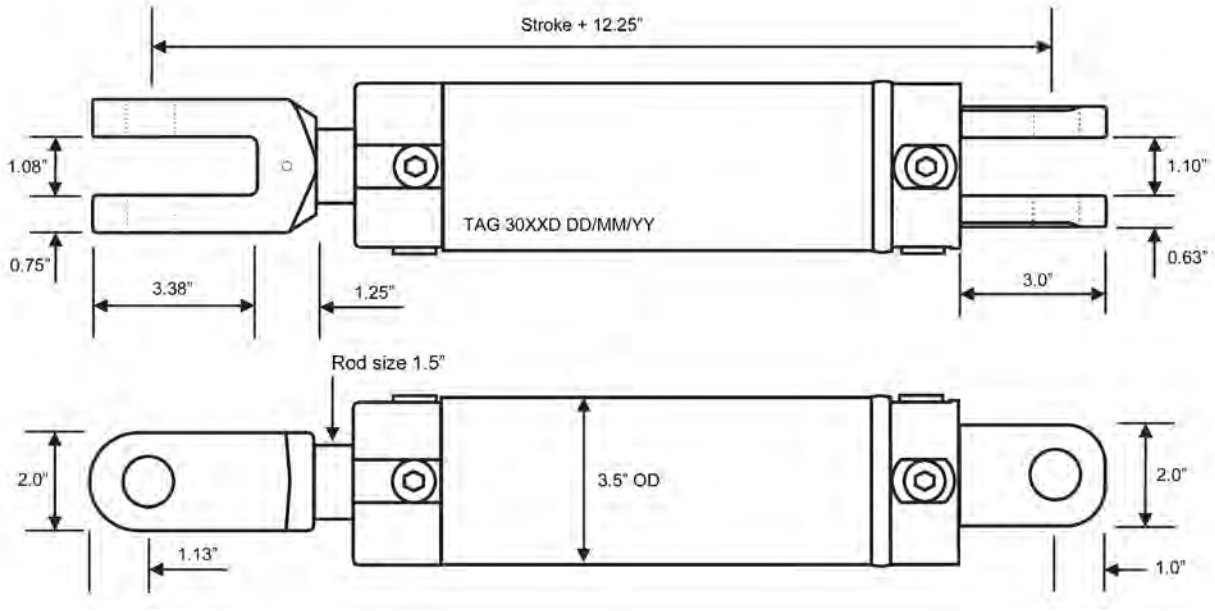

AUSTRALIAN MADE / 2 YEAR WARRANTY
DATED SERIAL NUMBER / DUAL PORT

WARNING: Hydraulic cylinders without a hose burst valve, pilot operated check valve or counter balance valve directly mounted to the cylinder will not meet Australian Standard AS1418.8, nor occupational health & safety rules.

AG Cylinders - 3.5" bore

AUSTRALIAN MADE

Part Number	List Price $	Stroke	Closed		Open		Description
			Inch	mm	Inch	mm	
TAG 3506D	**625.00**	6"	18.25"	463.55	24.25"	615.95	Maximum Pressure: 3500psi Ports: 3/4" UNO Pins: 1" pins
TAG 3508D	**625.00**	8"	20.25"	514.35	28.25"	714.55	
TAG 3510D	**666.00**	10"	22.25"	565.15	32.25"	819.15	
TAG 3512D	**708.00**	12"	24.25"	615.95	36.25"	920.75	
TAG 3514D	**749.00**	14"	26.25"	666.75	40.25"	1022.25	
TAG 3516D	**790.00**	16"	28.25"	717.55	44.25"	1123.25	
TAG 3518D	**832.00**	18"	30.25"	768.35	48.25"	1225.55	
TAG 3520D	**873.00**	20"	32.25"	819.15	52.25"	1327.15	
TAG 3524D	**956.00**	24"	36.25"	920.75	60.25"	1530.35	
TAG 3530D	**1079.00**	30"	42.25"	1073.15	72.25"	1835.15	
TAG 3536D	**1203.00**	36"	48.25"	1225.55	84.25"	2139.95	
TAG 3542D	**1446.00**	42"	54.25"	1377.95	96.25"	2444.75	
TAG 3548D	**1446.00**	48"	60.25"	1530.35	108.25"	2749.55	

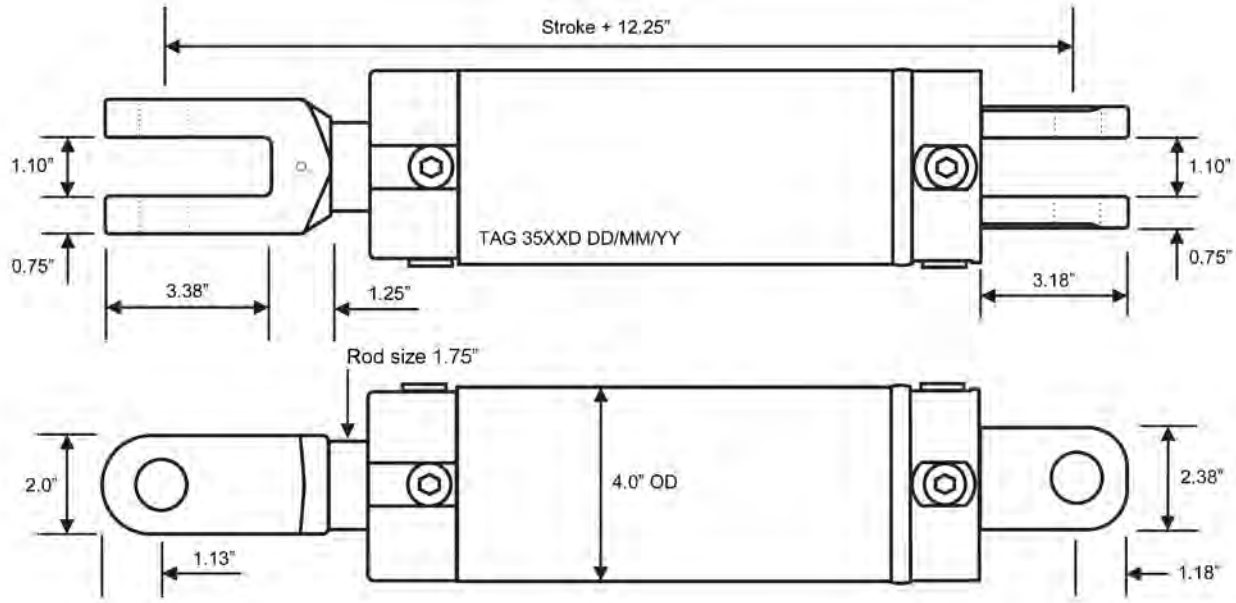

AUSTRALIAN MADE / 2 YEAR WARRANTY
DATED SERIAL NUMBER / DUAL PORT

WARNING: Hydraulic cylinders without a hose burst valve, pilot operated check valve or counter balance valve directly mounted to the cylinder will not meet Australian Standard AS1418.8, nor occupational health & safety rules.

Part Number	List Price $	Stroke	Rod	Closed Inch	Closed mm	Open Inch	Open mm	Description
TAG 4004D	**736.00**	4"	1.75"	16.25"	412.75	20.25"	514.35	Maximum Pressure: 3500psi Ports: 3/4" UNO Pins: 1" pins
TAG 4006D	**736.00**	6"		18.25"	463.55	24.25"	615.95	
TAG 4008D	**736.00**	8"		20.25"	514.35	28.25"	717.55	
TAG 4012D	**834.00**	12"		24.25"	615.95	36.25"	920.75	
TAG 4016D	**930.00**	16"		28.25"	717.55	44.25"	1123.95	
TAG 4018D	**980.00**	18"		30.25"	768.35	48.25"	1225.55	
TAG 4020D	**1029.00**	20"		32.25"	819.15	52.25"	1327.15	
TAG 4024D	**1126.00**	24"		36.25"	920.75	60.25"	1530.35	
TAG 4030D	**1272.00**	30"		42.25"	1073.15	72.25"	1835.15	
TAG 4036D	**1420.00**	36"		48.25"	1225.55	84.25"	2139.95	
TAG 4042D	**1562.00**	42"		54.25"	1377.95	96.25"	2444.75	
TAG 4048D	**1705.00**	48"		60.25"	1530.35	108.25"	2749.55	
TAG 4012D-200	**919.00**	12"	2"	24.25"	615.95	36.25"	920.75	
TAG 4016D-200	**950.00**	16"		28.25"	717.55	44.25"	1123.95	
TAG 4018D-200	**1082.00**	18"		30.25"	768.35	48.25"	1225.55	
TAG 4024D-200	**1239.00**	24"		36.25"	920.75	60.25"	1530.35	

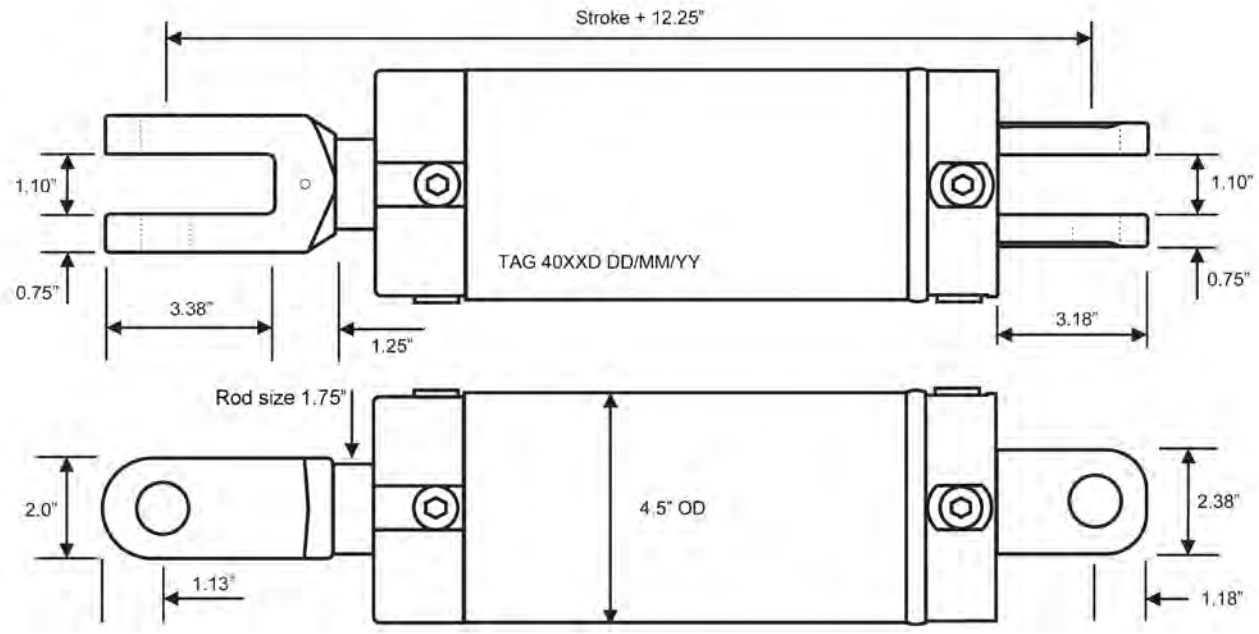

AUSTRALIAN MADE / 2 YEAR WARRANTY
DATED SERIAL NUMBER / DUAL PORT

WARNING: Hydraulic cylinders without a hose burst valve, pilot operated check valve or counter balance valve directly mounted to the cylinder will not meet Australian Standard AS1418.8, nor occupational health & safety rules.

AG Cylinders - 5.0" bore

AUSTRALIAN MADE

Part Number	List Price $	Stroke	Closed		Open		Description
			Inch	mm	Inch	mm	
TAG 5008D	**956.00**	8"	20.25"	514.35	28.25"	717.55	Maximum Pressure: 3500psi Ports: 3/4" UNO Pins: 1" pins
TAG 5012D	**1062.00**	12"	24.25"	615.95	36.25"	920.75	
TAG 5016D	**1160.00**	16"	28.25"	717.55	44.25"	1123.95	
TAG 5018D	**1211.00**	18"	30.25"	768.35	48.25"	1225.55	
TAG5020D	**1290.00**	20"	32.25"	819.15	52.25"	1327.15	
TAG 5024D	**1377.00**	24"	36.25"	920.75	60.25"	1530.35	
TAG 5030D	**1473.00**	30"	42.25"	1073.15	72.25"	1835.15	
TAG 5036D	**1642.00**	36"	48.25"	1225.55	84.25"	2139.95	
TAG 5048D	**1913.00**	48"	60.25"	1530.35	108.25"	2749.55	

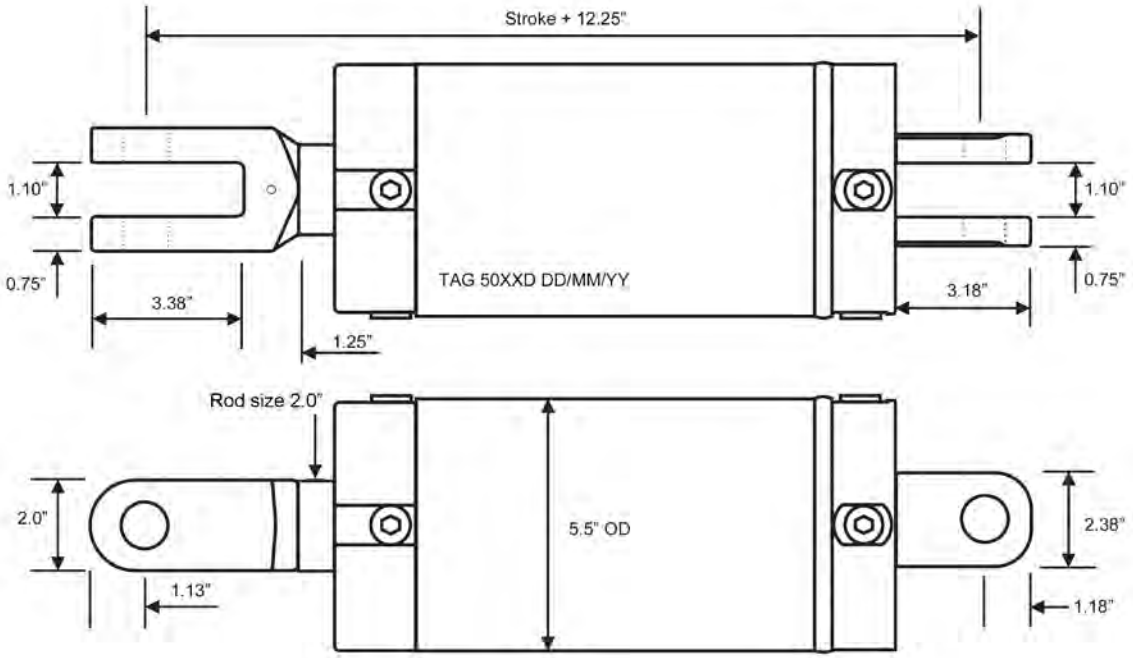

AUSTRALIAN MADE / 2 YEAR WARRANTY
DATED SERIAL NUMBER / DUAL PORT

WARNING: Hydraulic cylinders without a hose burst valve, pilot operated check valve or counter balance valve directly mounted to the cylinder will not meet Australian Standard AS1418.8, nor occupational health & safety rules.

AG Toplink Cylinders - 2.5" bore

Part Number	List Price $	Stroke	Closed		Open		Description
			Inch	mm	Inch	mm	
TAG 2504DT2	**485.00**	4"	16.25"	412.75	20.25"	514.35	Maximum Pressure: 3500psi Ports: 3/4" UNO Pins: 1" pins
TAG 2506DT2	**485.00**	6"	18.25"	463.55	24.25"	615.95	
TAG 2508DT2	**485.00**	8"	20.25"	514.35	28.25"	717.55	
TAG 2510DT2	**506.00**	10"	22.25"	565.15	32.25"	819.15	
TAG 2512DT2	**527.00**	12"	24.25"	615.95	36.25"	920.75	

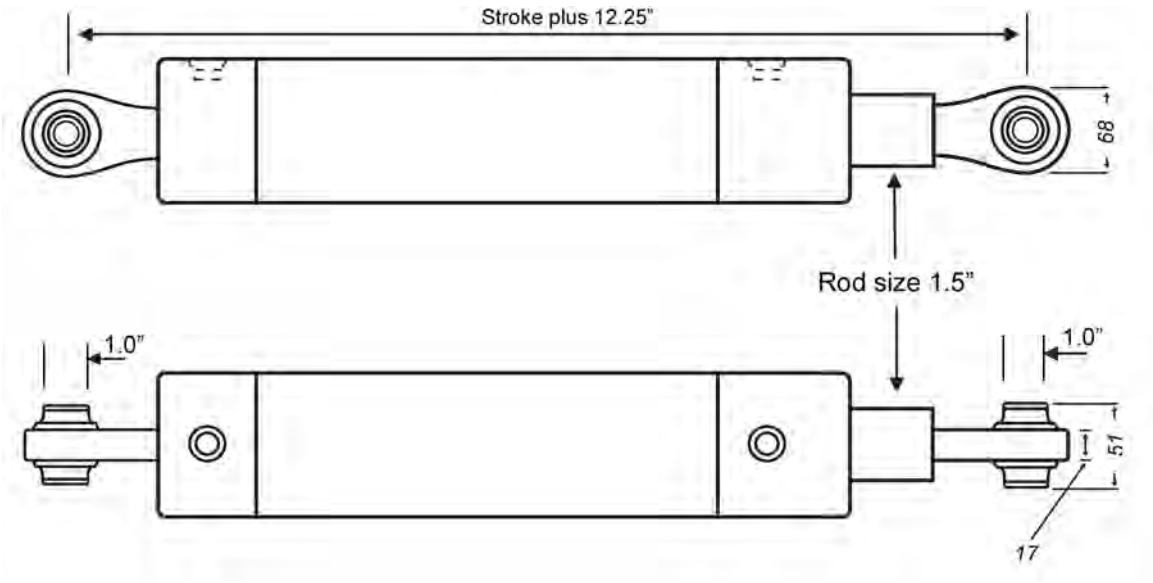

AUSTRALIAN MADE / 2 YEAR WARRANTY
DATED SERIAL NUMBER / DUAL PORT

WARNING: Hydraulic cylinders without a hose burst valve, pilot operated check valve or counter balance valve directly mounted to the cylinder will not meet Australian Standard AS1418.8, nor occupational health & safety rules.

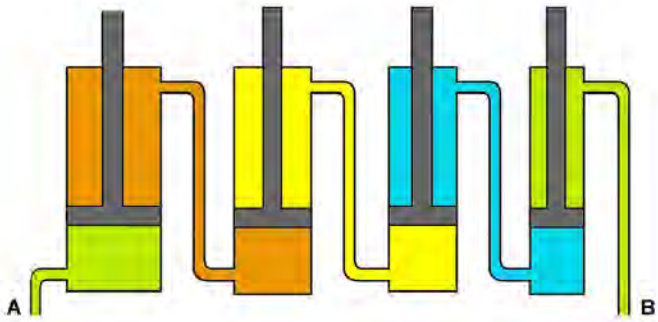

Hydraulic Phasing Cylinders - 8" stroke

Part Number	List Price $	Bore	Stroke	Rod Diameter	Closed		Open	
					Inch	mm	Inch	mm
TVP300008125	**709.00**	3.00"	8"	1.25"	20.25"	514.35	28.25"	717.55
TVP325008125	**814.00**	3.25"						
TVP350008125	**856.00**	3.50"						
TVP3750081375	**929.00**	3.75"		1.375"				
TVP4000081375	**908.00**	4.00"						
TVP4250081375	**1003.00**	4.25"						
TVP450008150	**1082.00**	4.50"		1.50"				
TVP475008150	**1244.00**	4.75"						
TVP500008150	**1302.00**	5.00"						

Hydraulic Phasing Cylinders - 12" stroke

Part Number	List Price $	Bore	Stroke	Rod Diameter	Closed		Open	
					Inch	mm	Inch	mm
TVP300012125	**782.00**	3.00"	12"	1.25"	24.25"	615.95	36.25"	920.75
TVP325012125	**882.00**	3.25"						
TVP350012125	**914.00**	3.50"						
TVP3750121375	**1003.00**	3.75"		1.375"				
TVP4000121375	**987.00**	4.00"						
TVP4250121375	**1160.00**	4.25"						
TVP450012150	**1239.00**	4.50"		1.50"				
TVP475012150	**1428.00**	4.75"						
TVP500012150	**1554.00**	5.00"						

AUSTRALIAN MADE / 2 YEAR WARRANTY
DATED SERIAL NUMBER / DUAL PORT

AUSTRALIAN MADE

Hydraulic Phasing Cylinders - 16" stroke

Part Number	List Price $	Bore	Stroke	Rod Diameter	Closed		Open	
					Inch	mm	Inch	mm
TVP300016125	830.00	3.00"	16"	1.25"	28.25"	717.55	44.25"	1123.95
TVP325016125	961.00	3.25"						
TVP350016125	1003.00	3.50"						
TVP3750161375	1087.00	3.75"		1.375"				
TVP4000161375	1082.00	4.00"						
TVP4250161375	1176.00	4.25"						
TVP450016150	1271.00	4.50"		1.50"				
TVP475016150	1481.00	4.75"						
TVP500016150	1575.00	5.00"						

Hydraulic Phasing Cylinders - 18" stroke

Part Number	List Price $	Bore	Stroke	Rod Diameter	Closed		Open	
					Inch	mm	Inch	mm
TVP300018125	835.00	3.00"	18"	1.25"	30.25"	768.35	48.25"	1225.55
TVP325018125	961.00	3.25"						
TVP350018125	1024.00	3.50"						
TVP3750181375	1118.00	3.75"		1.375"				
TVP4000181375	1092.00	4.00"						
TVP4250181375	1239.00	4.25"						
TVP450018150	1286.00	4.50"		1.50"				
TVP475018150	1502.00	4.75"						
TVP500018150	1596.00	5.00"						

Hydraulic Phasing Cylinders - 24" stroke

Part Number	List Price $	Bore	Stroke	Rod Diameter	Closed		Open	
					Inch	mm	Inch	mm
TVP300024125	877.00	3.00"	24"	1.25"	36.25"	920.75	60.25	1530.35
TVP325024125	1076.00	3.25"						
TVP350024125	1181.00	3.50"						
TVP3750241375	1260.00	3.75"		1.375"				
TVP4000241375	1208.00	4.00"						
TVP4250241375	1428.00	4.25"						
TVP450024150	1544.00	4.50"		1.50"				
TVP475024150	1796.00	4.75"						
TVP500024150	2037.00	5.00"						

AUSTRALIAN MADE / 2 YEAR WARRANTY
DATED SERIAL NUMBER / DUAL PORT

AUSTRALIAN MADE

Hydraulic Phasing Cylinders - 36" stroke

Part Number	List Price $	Bore	Stroke	Rod Diameter	Closed		Open	
					Inch	mm	Inch	mm
TVP300036125	**1349.00**	3.00"	36"	1.25"	48.25"	1225.55	84.25	2139.95
TVP325036125	**1685.00**	3.25"						
TVP350036125	**1691.00**	3.50"						
TVP3750361375	**1922.00**	3.75"		1.375"				
TVP4000361375	**1869.00**	4.00"						
TVP4250361375	**2158.00**	4.25"						
TVP450036150	**2163.00**	4.50"		1.50"				
TVP475036150	**2263.00**	4.75"						
TVP500036150	**2263.00**	5.00"						

AUSTRALIAN MADE / 2 YEAR WARRANTY
DATED SERIAL NUMBER / DUAL PORT

2" Short Closed Length Cylinders

Part Number	List Price $	Stroke	Closed		Open		Description
			Inch	mm	Inch	mm	
TAG 2004DSHCC	**468.00**	4"	13.5"	342.9	17.5"	444.5	Maximum Pressure: 3500psi Ports: 9/16" Pins: 3/4" Rod: 1"
TAG 2006DSHCC	**468.00**	6"	15.5"	393.7	21.5"	546.1	
TAG 2008DSHCC	**468.00**	8"	17.5"	444.5	25.5"	647.7	
TAG 2012DSHCC	**515.00**	12"	21.5"	546.1	33.5"	850.9	
TAG 2016DSHCC	**562.00**	16"	25.5"	647.7	41.5"	1054.1	

Special Length Cylinders

Part Number	List Price $	Stroke	Closed Centre mm	Open Centre	Max Pressure	Ports/Pins	Rod
TAG 25-1500D	**1108.00**	1500	1811.15	3311.15	3250psi	3/4" ports 1" pins	1.1/2"
TAG 25-2000D	**2117.00**	2000	2311.15	4311.15			
TAG 25-2500D	**2293.00**	2500	2811.15	5311.15			
TAG 25-3000D	**2494.00**	3000	3311.15	6311.15			
TAG 30-1800D-200	**2117.00**	1800	2111.15	3911.15			2"
TAG 30-1900D-200	**2293.00**	1900	2211.15	4111.15			
TAG 35-2000D	**2293.00**	2000	2311.15	4311.15			1.3/4"

Landing Legs

Part Number	List Price $	Rod	Bore	A	Stroke	Max Pressure	Ports
TF301620LEG	**1386.00**	2”	3”	245mm	16”	3500psi	9/16” UNO
TF302020LEG	**1848.00**			346mm	20”		
TF302420LEG	**1869.00**			480mm	24”		

AUSTRALIAN MADE / 2 YEAR WARRANTY
DUAL PILOT CHECK VALVES INCORPORATED

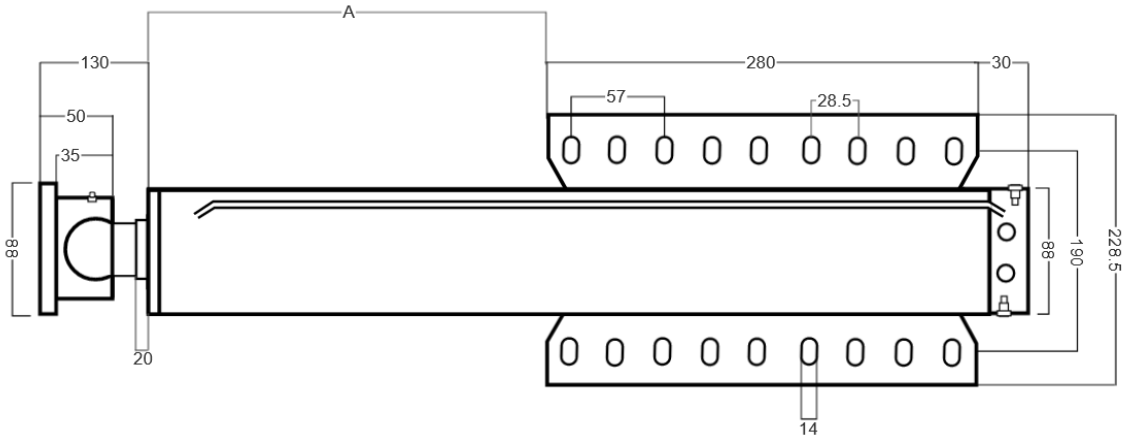

Concrete Truck Chute Jack Cylinders with Check Valve

Part Number	List Price $	Stroke	Closed Centre	Open Centre	Max Pressure	Ports/Pins	Rod
TCB 30300	**695.00**	300mm	564mm	864mm	3250psi	9/16” ports 16mm eyes	1.1/4”

Cylinder Attachments

Part Number	List Price $	Type	Thread	Pin Size	Material	Dimensions (mm) A	B	C
CL075	**125.00**	Female Clevis	3/4" UNF	0.75"	Steel	51	21	43
CL100S (short)	**147.00**		1.1/4" UNF	1.0"	SG Iron	60	28.6	66
CL100	**147.00**					88	27.5	57.5
CL100STEEL	**165.00**				Steel		28.6	66
CL125STEEL	**248.00**			1.25"			29	64
CL150	**201.00**	Block End		1.5" *			n/a	63.5
CLM075	**164.00**		3/4" UNF	0.75"		51	n/a	40
CLM100	**192.00**		1.1/4" UNF	1.0"		87		50
B310	**89.00**	Ball End	Weld on	0.75"		58		n/a
B311	**89.00**			1.0"		51		

** Reduction bushes to 1" are supplied with CL150 (can also be bushed to other sizes). Grease port included.*

Block End

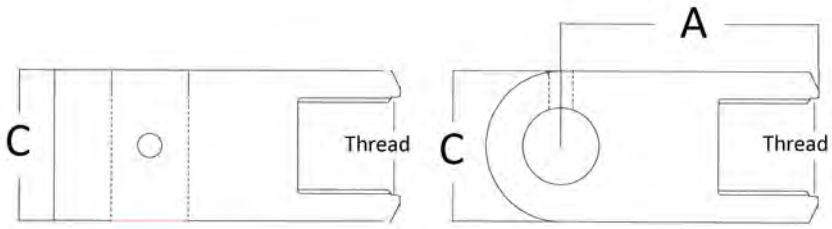

Female Clevis

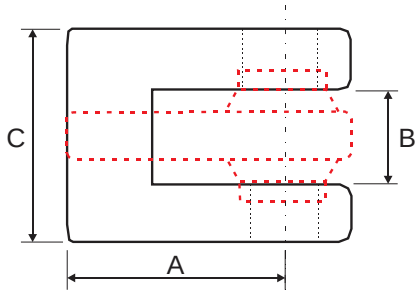

CL075

CL100

CL100S

CL100STEEL

CL125

CL150

B310

B311

Common Swivel Foot

Part Number	List Price $	Description
FOOTMTFEMALE50	**289.00**	Fits any of our hydraulic cylinders (1.1/4" UNF thread)

Whoa-Stop Cylinder Stroke Control Segments (Made in USA)

Part Number	List Price $	For Shaft Sizes	Set Contains Sizes
WA1090	**121.00**	1.128" > 1.500"	0.875" - 1.000" - 1.250" - 1.500"
WA1087	**221.00**	1.750" > 2.000"	1.000" - 1.500" - 2.000" - 2.250"

Other cylinder components also stocked (glands, pistons, endcaps) - contact us for info

Cylinder Pins

Part Number	List Price $	Dimensions A	B	C
CLPN075-46.5	**43.00**	3/4”	46.5mm	57.5mm
CLPN1-69	**39.00**	1”	69mm	81.5mm
CLPN1-60	**39.00**		60mm	72mm
CLPN1-76	**39.00**		76mm	90mm
CLPN125-87	**57.00**	1.1/4”	76mm	96mm

Pin Selection Guide

Cylinder Size	Size	Clevis Pin	Base End Pin
TAG 15	3/4”	CLPN075-46.5	CLPN075-46.5
TAG 20 SHORT CC			
TAG 20	1”	CLPN1-69	CLPN1-60
TAG 25			
TAG 30		CLPN1-76	CLPN1-69
TAG 35			CLPN1-76
TAG 40			
TAG 50			

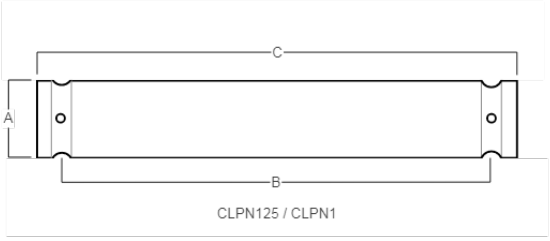

CLPN125 / CLPN1

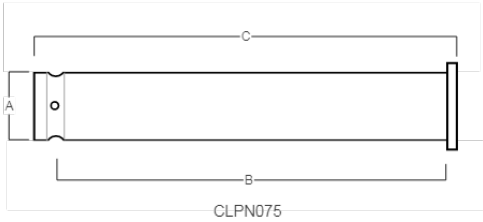

CLPN075

Plugs & Breathers

Part Number	List Price $	Description
A9431	**35.00**	Cylinder breather - brass cloth mesh filter - aluminium - 9/16-18 UNO thread
16329A	**39.00**	Cylinder breather - brass cloth mesh filter - aluminium - 3/4-16 UNO thread
DT-SAE6	**4.00**	9/16” UNO plug - hex key - low profile
DT-SAE8	**5.00**	3/4” UNO plug - hex key - low profile

Seal Kits

Part Number	List Price $	Cylinder Type	Bore Size	Shaft Size
SK15087CAT	**113.00**	TAG Cylinder	1.5”	0.875”
SK20125CAT	**125.00**		2.0”	1.25”
SK2515CAT	**125.00**		2.5”	1.5”
SK3015CAT	**135.00**		3.0”	
SK35175CAT	**137.00**		3.5”	1.75”
SK40175CAT	**153.00**		4.0”	
SK5020CAT	**206.00**		5.0”	2.0”