CATFORD ENGINEERING PRODUCTS

Jamestown
SA 5491

All Prices Excluding GST

Phone: 0418 641 566

www.catford.com.au sales@catford.com.au

Hydraulic Motors

*BMM, BMP & BMPH Gerotor Motors
*BMR, BMRS, BMSY, BMV & BMT Geroler Motors
*Hydraulic Brakes & Motor Valves

Lot 25, Mannanarie Road, Jamestown, South Australia 5491

PO Box 178, Jamestown, South Australia 5491

0418 641 566

sales@catford.com.au

Due to fluctuations in the Australian dollar and the economic climate, please be advised that all prices are subject to change.
Please contact us to confirm pricing.

All prices stated within are exclusive of GST
(All prices are correct as of January 1st 2021, but Catford Engineering reserve the right to change these prices without notice)

Hydraulic Motors

CATFORD ENGINEERING PRODUCTS

Jamestown
SA 5491

Phone: 0418 641 566
www.catford.com.au sales@catford.com.au

Cross Reference Chart 202
BMM Series Gerotor Motors 203
BMP Series Gerotor Motors 204
BMPH Series Gerotor Motors 206
BMR Series Geroler Motors 208
BMRS Series Geroler Motors 210
BMSY Series Geroler Motors 212
BMT Series Geroler Motors 214
BMV Series Geroler Motors 216
Hydraulic Brakes 218
Hydraulic Motor Valves 219
Planetary Gearbox 221

	Danfoss	Eaton	M+S	Parker	White
BMP, BMPH	OMP, DH	H	MP	TC	WP, WD
BMR, BMRS	OMR, DS	S	MR	TC	WR, RS
BMH	OMH		MH		
BMSY	OMS	2000	MSY	TF, TG	WS, RE, DR
BMT	OMT	4000, 6000	MT		
BMK6		6000			
BMV	OMV	6000, 10000	MV		
BMM	OMM		MM		
BME2		J2		TE, TC, TB	WG
BMER			HW	TF, TG	RE, RC
BMEC					CE
BMJ	OMEW	W	RW	TJ	
BMPW	OMEW		PW		

BMM Series

Size:		BMM8	BMM12.5	BMM20	BMM32	BMM40	BMM50
List Price $		**361.00**	**361.00**	**361.00**	**386.00**	**453.00**	**453.00**
CC		8.2	12.9	19.9	31.6	39.8	50.3
Features		1/8" BSPP standard case drain					
Flange options **(B)**		**(F)** SAE AA 2 bolt **(M)** face mount					
Shaft options **(C)**		**(A)** 16mm keyed **(B)** 5/8" keyed **(C)** 16.5mm 9T spline					
Ports **(D)**		**(1E)** 3/8" BSPP Rear **(E)** 3/8" BSPP Side					
Part Number build = Size + **(B)** + **(C)** + **(D)** e.g. BMM8-F-A-E							
Max Inlet Pressure Cont	Bar	175	175	175	175	175	175
Max Inlet Pressure Int		225	225	225	225	225	225
Max Speed Cont	Rpm	1950	1550	1000	630	500	400
Max Speed Int		2450	1940	1250	800	630	500
Pressure Cont	Bar	100	100	100	100	90	70
Pressure Int		140	140	140	140	140	140
Pressure Peak		200	200	200	160	160	160
Max Torque Cont	Nm	11	16	25	40	45	46
Max Torque Int		15	23	35	57	70	88
Max Torque Peak		21	33	51	64	82	100
Max Output Cont	kW	1.8	2.4	2.4	2.4	2.2	1.8
Max Output Int		2.6	3.2	3.2	3.2	3.2	3.2
Max Flow Cont	lpm	16	20	20	20	20	20
Max Flow Int		20	25	25	25	25	25
Weight	kg	1.9	2	2.1	2.2	2.3	2.4
M Flange L	mm	104	106	109	114	117.5	122
M Flange L1		3.5	5.5	8.5	13.5	17	21.5
F Flange L		107.5	109.5	112.5	117.5	121	125.5
F Flange L1		3.5	5.5	8.5	13.5	17	21.5

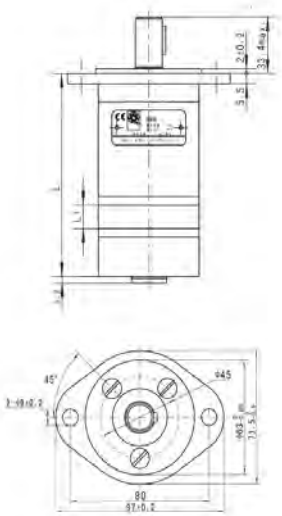

Seal Kit

Part Number	List Price $
BMM-SK	**52.00**

BMP Series

Size:		BMP36	BMP50	BMP80	BMP100	BMP125	BMP160	BMP200	BMP250	BMP315	BMP400
List Price $		**443.00**	**443.00**	**453.00**	**453.00**	**464.00**	**474.00**	**494.00**	**515.00**	**546.00**	**556.00**
CC		36	51.7	77.7	96.2	120.2	157.2	194.5	240.3	314.5	389.5
Features		Needle bearings + 200 Bar shaft seals									
Ports		1/2" BSPP (A+B), 1/4" BSPP Drain									
Flange options **(B)**		**(2)** SAE A 2 bolt **(4)** 4 bolt magneto **(H4)** 4 bolt square									
Shaft options **(C)**		**(C)** 1" keyed **(A)** 25mm keyed **(E)** 1" 6T spline **(F)** 14T spline **(T)** 28.56mm taper									
Part Number build = Size + **(B)** + **(C)** e.g. BMP36-2-E											
Max Speed Cont	Rpm	1500	1150	770	615	490	383	310	250	192	155
Max Speed Int	Rpm	1650	1450	960	770	615	475	385	310	240	190
Pressure Cont	Bar	125	140	140	140	140	140	140	110	90	70
Pressure Int	Bar	165	175	175	175	175	175	175	140	140	105
Pressure Peak	Bar	225	225	225	225	225	225	225	180	160	140
Max Torque Cont	Nm	55	100	146	182	236	302	360	380	375	360
Max Torque Int	Nm	76	128	186	227	290	370	440	460	555	525
Max Torque Peak	Nm	96	148	218	264	360	434	540	550	650	680
Max Output Cont	kW	8	10	10	11	10	10	10	8.5	7	6
Max Output Int	kW	11.5	12	12	13	12	12	12	10.5	8.5	7
Max Flow Cont	lpm	55	60	60	60	60	60	60	60	60	60
Max Flow Int	lpm	60	75	75	75	75	75	75	75	75	75
Weight	kg	5.6	5.6	5.7	5.9	6	6.2	6.4	7	6.9	7.4
Dimension L	mm	137	137	140.5	143	146	151	157	162	172	182
Dimension L1	mm	7	7	10.5	13	16	21	26	32	42	52
A/B		G1/2"									
C		M8									
T		G1/4"									

Seal Kit

Part Number	List Price $
BMP-SK	**52.00**

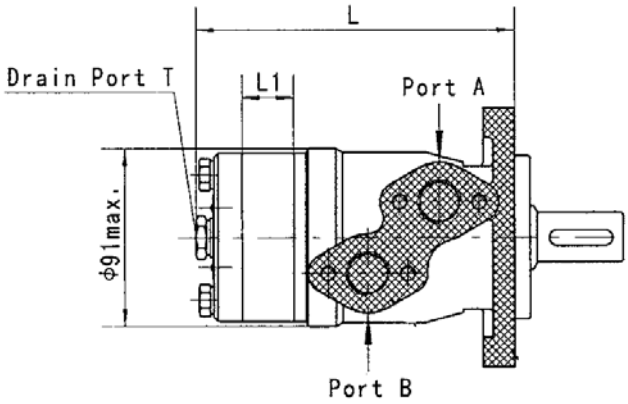

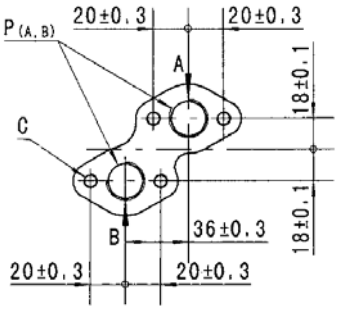

(2)

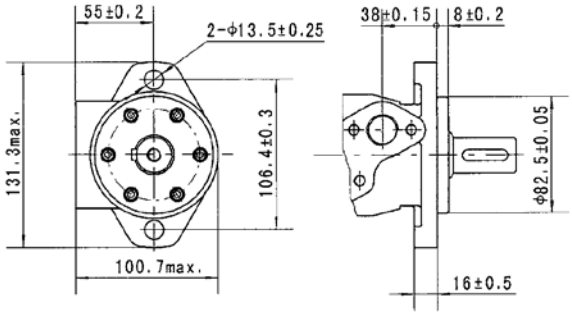
55±0.2
2-Φ13.5±0.25
38±0.15
8±0.2
131.3max.
106.4±0.3
Φ82.5±0.05
100.7max.
16±0.5

(A)

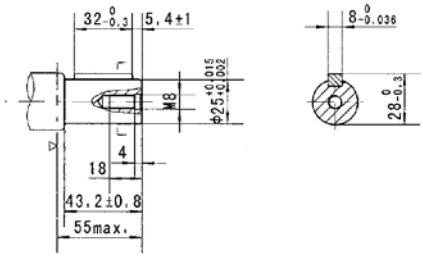
32 0 -0.3
5.4±1
M8
Φ25 +0.015 +0.002
4
18
43.2±0.8
55max.
8 0 -0.036
28 0 -0.3

(4)

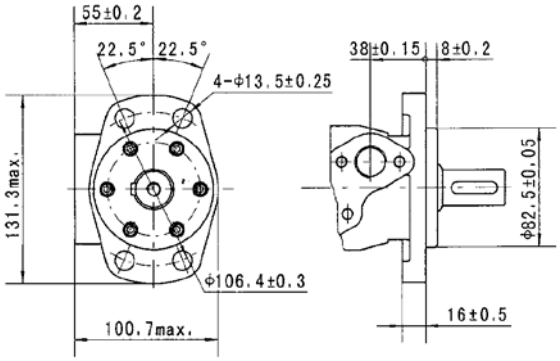
55±0.2
22.5°
22.5°
4-Φ13.5±0.25
38±0.15
8±0.2
131.3max.
Φ82.5±0.05
Φ106.4±0.3
100.7max.
16±0.5

(C)

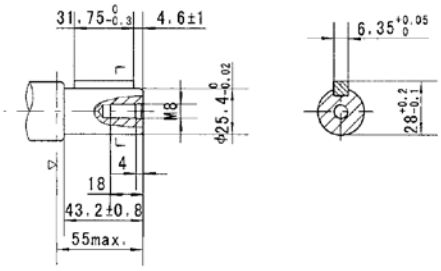
31.75 0 -0.3
4.6±1
M8
Φ25.4 0 -0.02
4
18
43.2±0.8
55max.
6.35 +0.05 0
28 +0.2 -0.1

(H4)

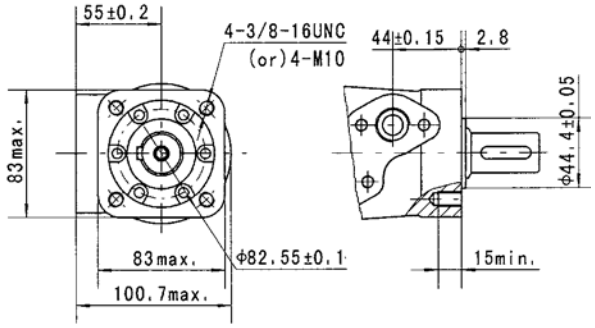
55±0.2
4-3/8-16UNC
(or)4-M10
44±0.15
2.8
83max.
Φ44.4±0.05
83max.
Φ82.55±0.1
15min.
100.7max.

(E)

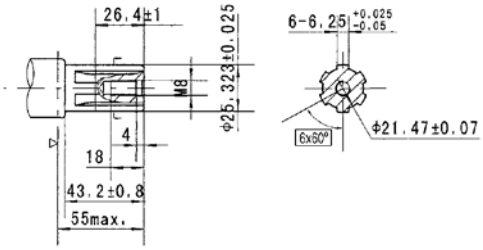
26.4±1
M8
Φ25.323±0.025
4
18
43.2±0.8
55max.
6-6.25 +0.025 -0.05
6x60°
Φ21.47±0.07

BMPH Series

Size:		BMPH 36	BMPH 50	BMPH 80	BMPH 100	BMPH 125	BMPH 160	BMPH 200	BMPH 250	BMPH 315	BMPH 400
List Price $		**443.00**	**443.00**	**453.00**	**453.00**	**464.00**	**474.00**	**494.00**	**515.00**	**546.00**	**556.00**
CC		36	51.7	77.7	96.2	120.2	157.2	194.5	240.3	314.5	389.5
Features		Needle bearings + 200 Bar shaft seals									
Ports		7/8" UNO (A+B), 7/16" UNO Drain									
Flange options **(B)**		**(H2)** SAE A 2 bolt **(H6)** 4 bolt magneto **(H4)** 4 bolt square									
Shaft options **(C)**		**(R)** 1" keyed **(A)** 25mm keyed **(S)** 1" 6T spline **(I)** 13T spline **(T2)** 25.4mm taper									
Part Number build = Size + **(B)** + **(C)** e.g. BMPH36-H2-R											
Max Speed Cont	Rpm	1500	1150	770	615	490	383	310	250	192	155
Max Speed Int	Rpm	1650	1450	960	770	615	475	385	310	240	190
Pressure Cont	Bar	125	140	140	140	140	140	140	110	90	70
Pressure Int	Bar	165	175	175	175	175	175	175	140	140	105
Pressure Peak	Bar	225	225	225	225	225	225	225	180	160	140
Max Torque Cont	Nm	55	100	146	182	236	302	360	380	375	360
Max Torque Int	Nm	76	128	186	227	290	370	440	460	555	525
Max Torque Peak	Nm	96	148	218	264	360	434	540	550	650	680
Max Output Cont	kW	8	10	10	11	10	10	10	8.5	7	6
Max Output Int	kW	11.5	12	12	13	12	12	12	10.5	8.5	7
Max Flow Cont	lpm	55	60	60	60	60	60	60	60	60	60
Max Flow Int	lpm	60	75	75	75	75	75	75	75	75	75
Weight	kg	5.6	5.6	5.7	5.9	6	6.2	6.4	7	6.9	7.4
Dimension L	mm	141	141	144.5	147	150	155	160	166	176	186
Dimension L1	mm	7	7	10.5	13	16	21	26	32	42	52
A/B		7/8" UNO									
T		7/16" UNO									

Seal Kit

Part Number	List Price $
BMPH-SK	**103.00**

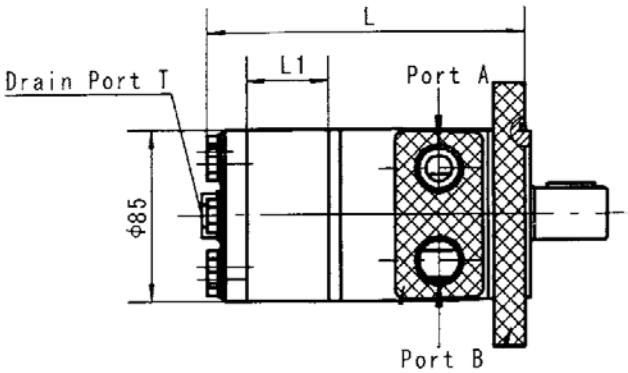

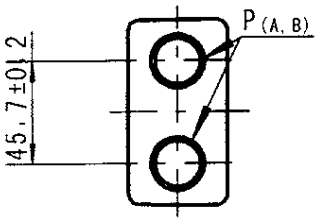

(H2)

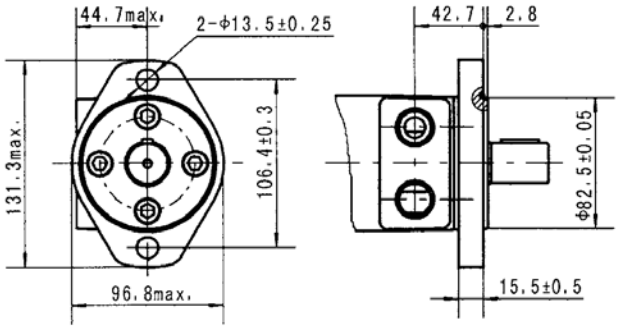
44.7max.
2-Φ13.5±0.25
42.7
2.8
131.3max.
106.4±0.3
Φ82.5±0.05
96.8max.
15.5±0.5

(A)

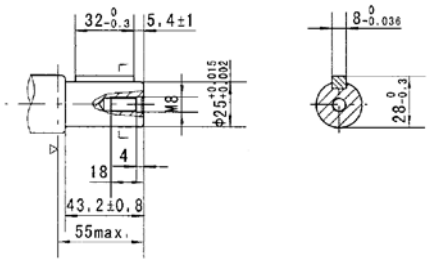
32-0.3
5.4±1
M8
Φ25+0.015 +0.002
8-0.036
28-0.3
4
18
43.2±0.8
55max.

(H6)

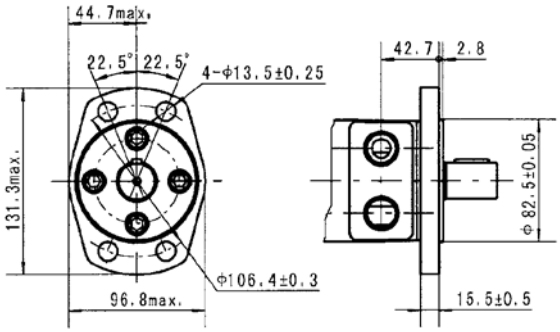
44.7max.
22.5°
22.5°
4-Φ13.5±0.25
42.7
2.8
131.3max.
Φ82.5±0.05
Φ106.4±0.3
96.8max.
15.5±0.5

(R)

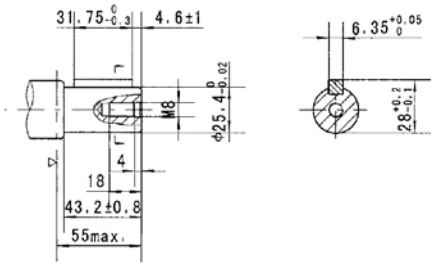
31.75-0.3
4.6±1
M8
Φ25.4-0.02
6.35+0.05 0
28+0.2 -0.1
4
18
43.2±0.8
55max.

(H4)

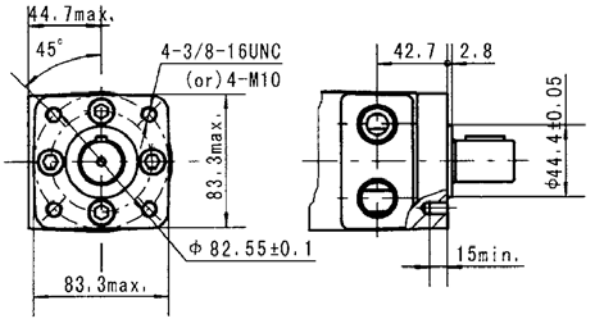
44.7max.
45°
4-3/8-16UNC
(or)4-M10
42.7
2.8
83.3max.
Φ44.4±0.05
Φ82.55±0.1
83.3max.
15min.

(S)

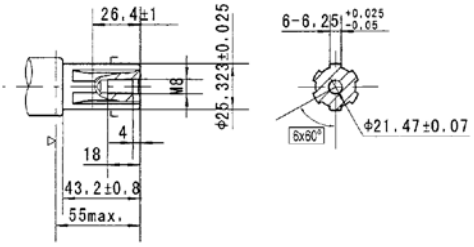
26.4±1
M8
Φ25.323±0.025
6-6.25 +0.025 -0.05
6x60°
Φ21.47±0.07
4
18
43.2±0.8
55max.

BMR Series

Size:		BMR36	BMR50	BMR80	BMR100	BMR125	BMR160	BMR200	BMR250	BMR315	BMR400
List Price $		**525.00**	**525.00**	**536.00**	**536.00**	**546.00**	**556.00**	**567.00**	**577.00**	**608.00**	**618.00**
CC		36	51.7	81.5	102	127.2	157.2	194.5	253.3	317.5	381.4
Features		Needle bearings + 200 Bar shaft seals									
Ports		1/2" BSPP (A+B), 1/4" BSPP Drain									
Flange options **(B)**		**(2)** SAE A 2 bolt **(4)** 4 bolt magneto **(H4)** 4 bolt square									
Shaft options **(C)**		**(C)** 1" keyed **(A)** 25mm keyed **(E)** 1" 6T spline **(F)** 14T spline **(B)** 32mm keyed **(I)** 13T spline **(T)** 28.56mm taper **(G)** 1.1/4" keyed									
Part Number build = Size + **(B)** + **(C)** e.g. BMR36-2-E											
Max Speed Cont	Rpm	1085	960	750	600	475	378	310	240	190	155
Max Speed Int	Rpm	1220	1150	940	750	600	475	385	300	240	190
Pressure Cont	Bar	140	140	175	175	175	165	130	110	90	70
Pressure Int	Bar	165	175	200	200	200	200	175	150	130	100
Pressure Peak	Bar	225	225	225	225	225	225	225	200	175	150
Max Torque Cont	Nm	72	100	195	240	300	360	360	390	390	365
Max Torque Int	Nm	83	126	220	280	340	430	440	490	535	495
Max Torque Peak	Nm	105	165	270	320	370	460	560	640	650	680
Max Output Cont	kW	8.5	9.5	12.5	13	12.5	12.5	10	7	6	5
Max Output Int	kW	9.8	11.2	15	15	14.5	14	13	9.5	9	8
Max Flow Cont	lpm	40	50	60	60	60	60	60	60	60	60
Max Flow Int	lpm	45	60	75	75	75	75	75	75	75	75
Weight	kg	6.5	6.7	6.9	7	7.3	7.6	8	8.5	9	9.5
Dimension L	mm	137	140	146	150	155	161.5	170	180	192	204
Dimension L1	mm	7	10	16	20	25	30.5	38.1	50	62	74
A/B		G1/2"									
C		M8									
T		G1/4"									

Seal Kit

Part Number	List Price $
BMR-SK	**72.00**

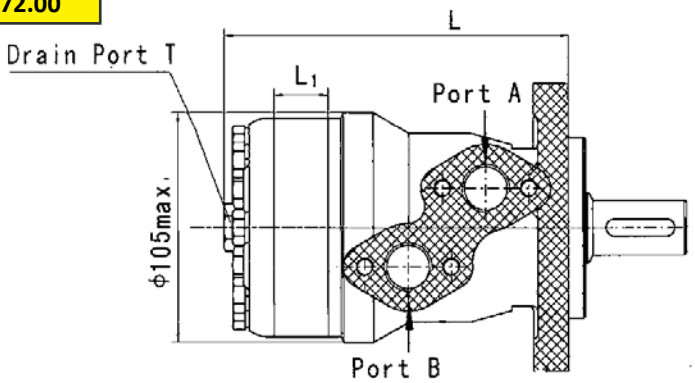

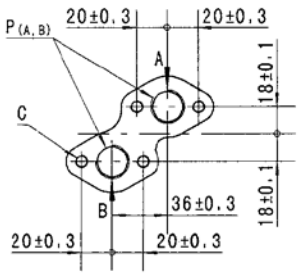

(2)

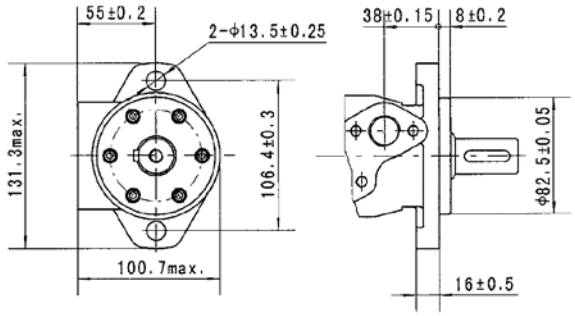
55±0.2
2-Φ13.5±0.25
38±0.15
8±0.2
131.3max.
106.4±0.3
Φ82.5±0.05
100.7max.
16±0.5

(A)

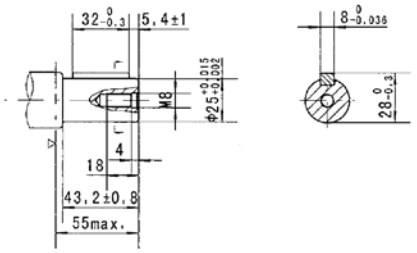
32
5.4±1
M8
4
18
43.2±0.8
55max.

(4)

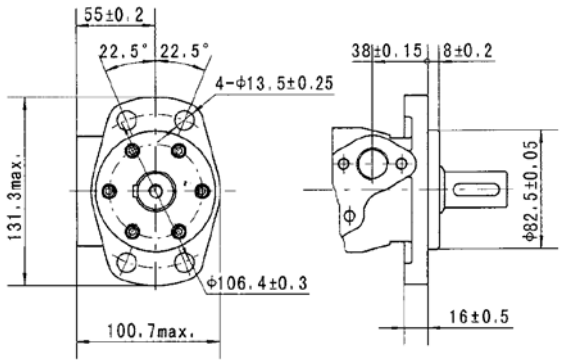
55±0.2
22.5°
22.5°
4-Φ13.5±0.25
38±0.15
8±0.2
131.3max.
Φ82.5±0.05
Φ106.4±0.3
100.7max.
16±0.5

(C)

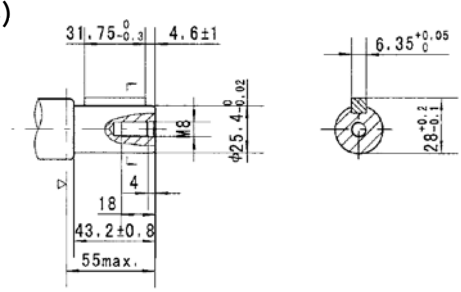
31.75
4.6±1
6.35
M8
4
18
43.2±0.8
55max.

(H4)

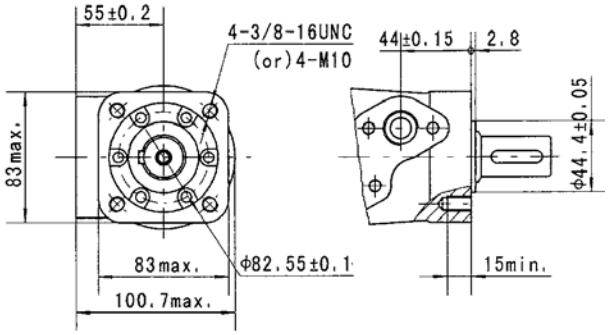
55±0.2
4-3/8-16UNC
(or)4-M10
44±0.15
2.8
83max.
Φ44.4±0.05
83max.
Φ82.55±0.1
15min.
100.7max.

(E)

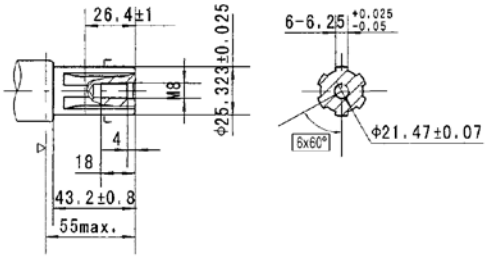
26.4±1
6-6.25
M8
Φ25.323±0.025
Φ21.47±0.07
6x60°
4
18
43.2±0.8
55max.

BMRS Series

Size:		BMRS 36	BMRS 50	BMRS 80	BMRS 100	BMRS 125	BMRS 160	BMRS 200	BMRS 250	BMRS 315	BMRS 400
List Price $		**525.00**	**525.00**	**536.00**	**536.00**	**546.00**	**556.00**	**567.00**	**577.00**	**608.00**	**618.00**
CC		36	51.7	81.5	102	127.2	157.2	194.5	253.3	317.5	381.4
Features		Needle bearings + 200 Bar shaft seals									
Ports		7/8" UNO (A+B), 7/16" UNO Drain									
Flange options **(B)**		**(H2)** SAE A 2 bolt **(H6)** 4 bolt magneto **(H4)** 4 bolt square									
Shaft options **(C)**		**(R)** 1" keyed **(A)** 25mm keyed **(S)** 1" 6T spline **(F)** 14T spline **(I)** 13T spline **(T2)** 25.4mm taper									
Part Number build = Size + **(B)** + **(C)** e.g. BMRS36-H2-F											
Max Speed Cont	Rpm	1085	960	750	600	475	378	310	240	190	155
Max Speed Int	Rpm	1220	1150	940	750	600	475	385	300	240	190
Pressure Cont	Bar	140	140	175	175	175	165	130	110	90	70
Pressure Int	Bar	165	175	200	200	200	200	175	150	130	100
Pressure Peak	Bar	225	225	225	225	225	225	225	200	175	150
Max Torque Cont	Nm	72	100	195	240	300	360	360	390	390	365
Max Torque Int	Nm	83	126	220	280	340	430	440	490	535	495
Max Torque Peak	Nm	105	165	270	320	370	460	560	640	650	680
Max Output Cont	kW	8.5	9.5	12.5	13	12.5	12.5	10	7	6	5
Max Output Int	kW	9.8	11.2	15	15	14.5	14	13	9.5	9	8
Max Flow Cont	lpm	40	50	60	60	60	60	60	60	60	60
Max Flow Int	lpm	45	60	75	75	75	75	75	75	75	75
Weight	kg	6.5	6.7	6.9	7	7.3	7.6	8	8.5	9	9.5
Dimension L	mm	137	140	146	150	155	161.5	170	180	192	204
Dimension L1	mm	7	10	16	20	25	30.5	38.1	50	62	74
A/B		7/8" UNO									
T		7/16" UNO									

Seal Kit

Part Number	List Price $
BMRS-SK	**72.00**

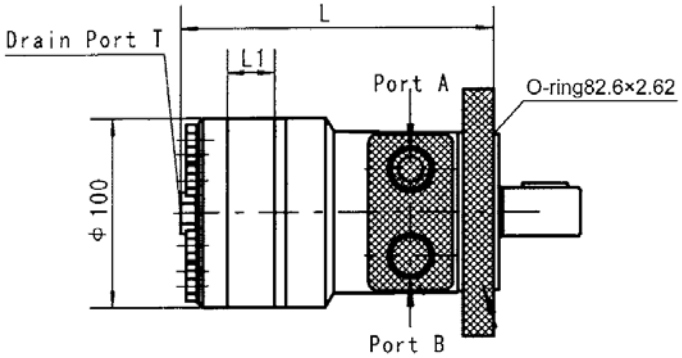

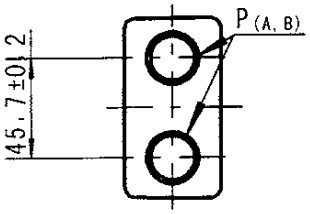

(H2)

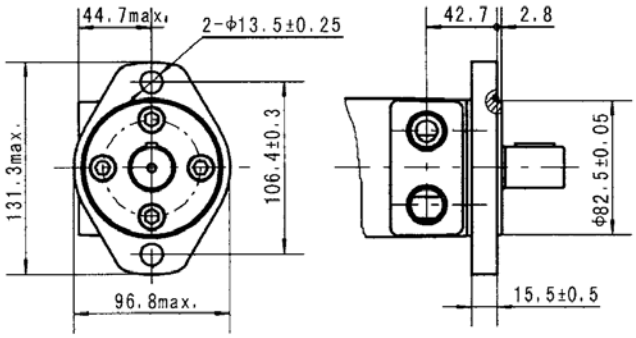
44.7max.
2-Φ13.5±0.25
42.7
2.8
131.3max.
106.4±0.3
Φ82.5±0.05
96.8max.
15.5±0.5

(A)

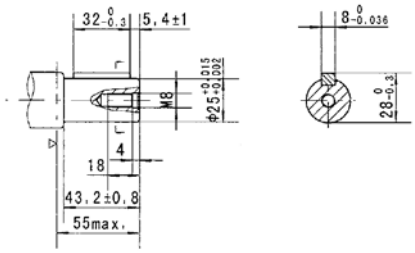
32-0.3
5.4±1
8-0.036
M8
Φ25+0.015 +0.002
28-0.3
4
18
43.2±0.8
55max.

(H6)

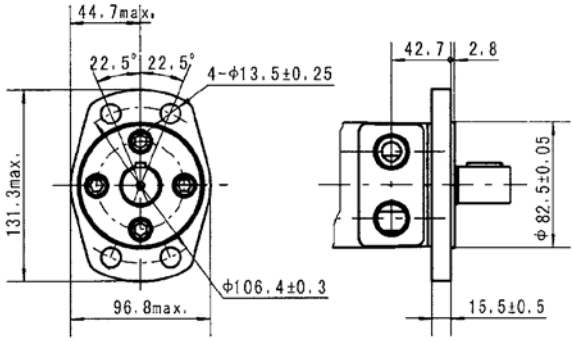
44.7max.
22.5°
22.5°
4-Φ13.5±0.25
42.7
2.8
131.3max.
Φ82.5±0.05
Φ106.4±0.3
96.8max.
15.5±0.5

(R)

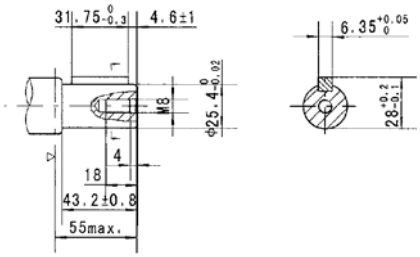
31.75-0.3
4.6±1
6.35+0.05 0
M8
Φ25.4-0.02
28-0.2 -0.1
4
18
43.2±0.8
55max.

(H4)

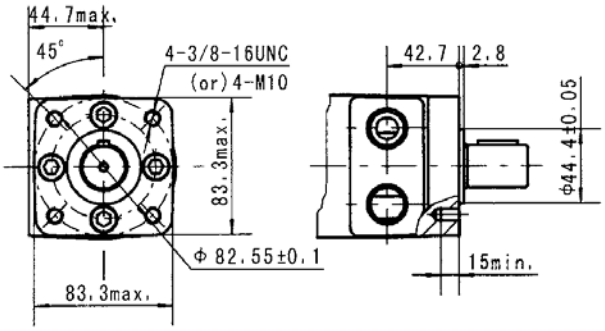
44.7max.
45°
4-3/8-16UNC
(or)4-M10
42.7
2.8
83.3max.
Φ44.4±0.05
Φ 82.55±0.1
15min.
83.3max.

(S)

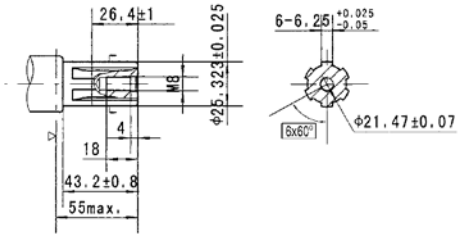
26.4±1
6-6.25 +0.025 -0.05
M8
Φ25.323±0.025
6x60°
Φ21.47±0.07
4
18
43.2±0.8
55max.

BMSY Series

Size:		BMSY 80	BMSY 100	BMSY 125	BMSY 160	BMSY 200	BMSY 250	BMSY 315	BMSY 400	BMSY 475
List Price $		**886.00**	**906.00**	**937.00**	**958.00**	**989.00**	**1009.00**	**1030.00**	**1071.00**	**1236.00**
CC		80.6	100.8	125	154	194	243	311	394	475
Features		Tapered roller bearings + 200 Bar shaft seals								
Ports		1/2" BSPP (A+B), 1/4" BSPP Drain								
Flange options **(B)**		**(E2)** SAE A 2 bolt **(E4)** 4 bolt square **(F6)** 6 bolt magneto								
Shaft options **(C)**		**(G)** 1.1/4" keyed **(B)** 32mm keyed **(F)** 14T spline **(T1)** 35mm taper								
Part Number build = Size + **(B)** + **(C)** e.g. BMSY80-E2-G										
Max Inlet Press Cont	Bar	250	250	250	250	250	250	250	250	250
Max Inlet PresS Int		300	300	300	300	300	300	300	300	300
Max Speed Cont	Rpm	800	748	600	470	375	300	240	185	155
Max Speed Int		988	900	720	560	450	360	280	225	185
Pressure Cont	Bar	205	205	205	210	210	200	200	160	140
Pressure Int		225	225	225	225	225	225	225	175	150
Pressure Peak		295	295	295	225	225	225	225	200	175
Max Torque Cont	Nm	225	290	365	485	586	708	880	880	910
Max Torque Int		250	320	400	540	645	806	960	960	960
Max Output Cont	kW	16	18	18	18.1	18.1	18	17	11	9
Max Output Int		20	22	23	25	24	23.8	20.2	12	11
Max Flow Cont	lpm	65	75	75	75	75	75	75	75	75
Max Flow Int		80	90	90	90	90	90	90	90	90
Weight	kg	9.8	10	10.3	10.7	11.1	11.6	12.3	13.2	14.3
Dimension L	mm	170	174	179	181	188	196	208	223	237
Dimension L1		16	20	25	27	34	42	54	69	83
A/B		G1/2"								
C		M10								
T		G1/4"								

Seal Kit

Part Number	List Price $
BMSY-SK	**72.00**

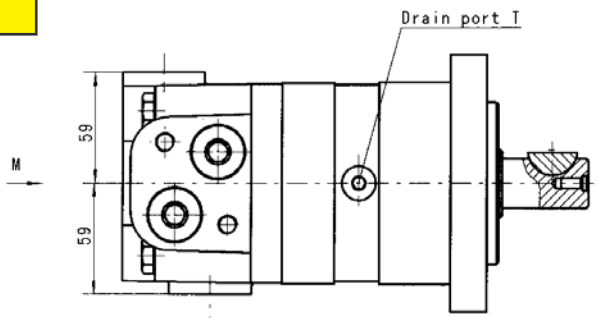

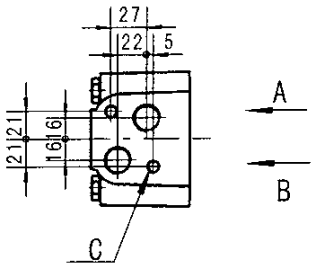

(E2)

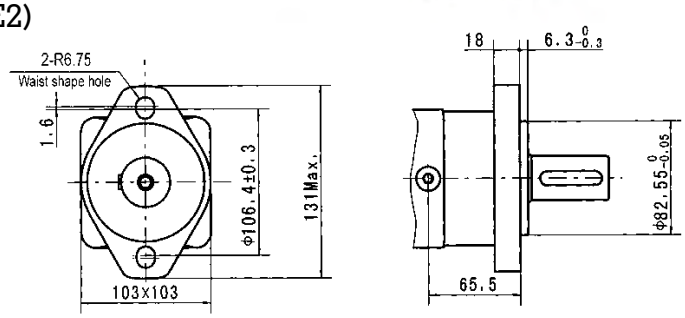
2-R6.75
Waist shape hole
1.6
Φ106.4±0.3
131Max.
103x103
18
6.3 0 -0.3
Φ82.55 0 -0.05
65.5

(G)

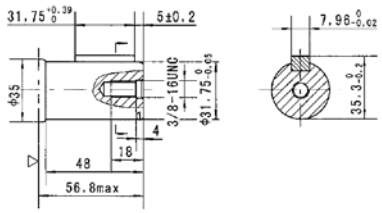
31.75 +0.39 0
5±0.2
7.96 0 -0.02
Φ35
3/8-16UNC
Φ31.75 0 -0.05
35.3 0 -0.2
4
18
48
56.8max

(E4)

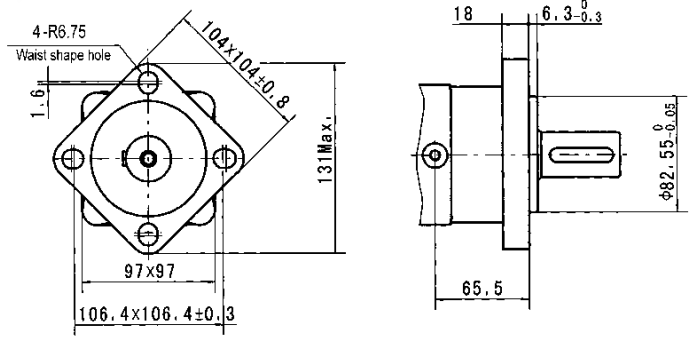
4-R6.75
Waist shape hole
104x104±0.8
1.6
131Max.
97x97
106.4x106.4±0.3
18
6.3 0 -0.3
Φ82.55 0 -0.05
65.5

(B)

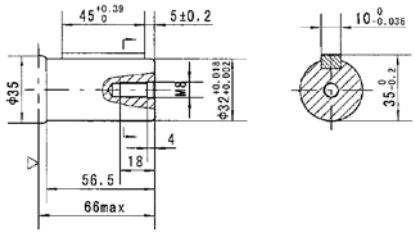
45 +0.39 0
5±0.2
10 0 -0.036
Φ35
M6
Φ32 +0.018 +0.002
35 0 -0.2
4
18
56.5
66max

(F6)

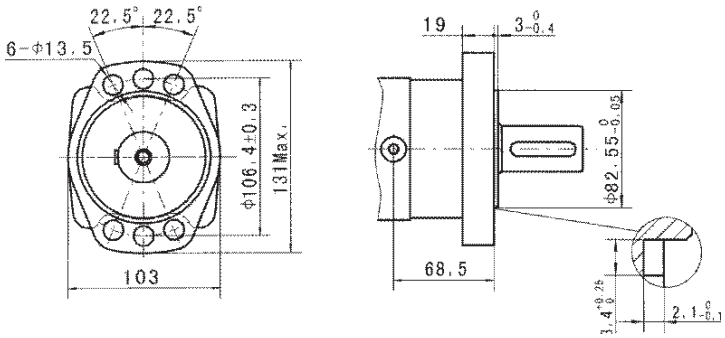
22.5° 22.5°
6-Φ13.5
Φ106.4±0.3
131Max.
103
19
3 0 -0.4
Φ82.55 0 -0.05
68.5
3.4 +0.25 0
2.1 0 -0.1

(F)

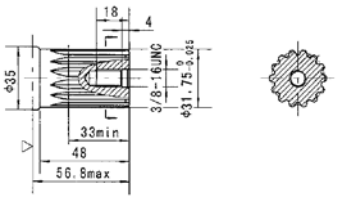
18
4
Φ35
3/8-16UNC
Φ31.75 0 -0.05
33min
48
56.8max

BMT Series

Size:		BMT160	BMT200	BMT250	BMT315	BMT400	BMT500	BMT630	BMT800
List Price $		**1566.00**	**1576.00**	**1607.00**	**1617.00**	**1658.00**	**1813.00**	**1854.00**	**1906.00**
CC		161.1	201.4	251.8	326.3	410.9	523.6	629.1	801.8
Ports		3/4" BSPP (A+B), 1/4" BSPP drain							
Flange options **(B)**		**(4)** 4 bolt square							
Shaft options **(C)**		**(M)** 40mm **(G)** 1.1/2" **(B)** 32 **(G1)** 1.1/4"							
Part Number build = Size + **(B)** + **(C)** e.g. BMT160-4-M									
Max Speed Cont	Rpm	625	625	500	380	305	240	196	154
Max Speed Int	Rpm	780	750	600	460	365	285	233	185
Pressure Cont	Bar	200	200	200	200	180	160	140	125
Pressure Int	Bar	240	240	240	240	210	180	160	130
Pressure Peak	Bar	280	280	280	280	240	210	190	160
Max Torque Cont	Nm	470	590	730	950	1080	1220	1318	1464
Max Torque Int	Nm	560	710	880	1140	1260	1370	1498	1520
Max Output Cont	kW	27.7	34.9	34.5	34.9	31.2	28.8	25.3	22.2
Max Output Int	kW	32	40	40	40	35	35	27.5	26.8
Max Flow Cont	lpm	100	125	125	125	125	125	125	125
Max Flow Int	lpm	125	150	150	150	150	150	150	150
Max Inlet Press Cont	Bar	210	210	210	210	210	210	210	210
Max Inlet Press Int	Bar	250	250	250	250	250	250	250	250
Weight	kg	19.5	20	20.5	21	22	23	24	25
Dimension L	mm	193	197	204	210	217	225	237	248
Dimension L1	mm	17	21	14	20	27	35	47	58
Dimension L2	mm	142.5	146.5	152.5	158.5	165.5	173.5	185.5	196.5

Seal Kit

Part Number	List Price $
BMT-SK	**113.00**

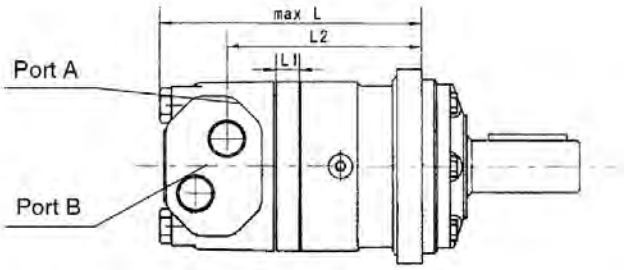

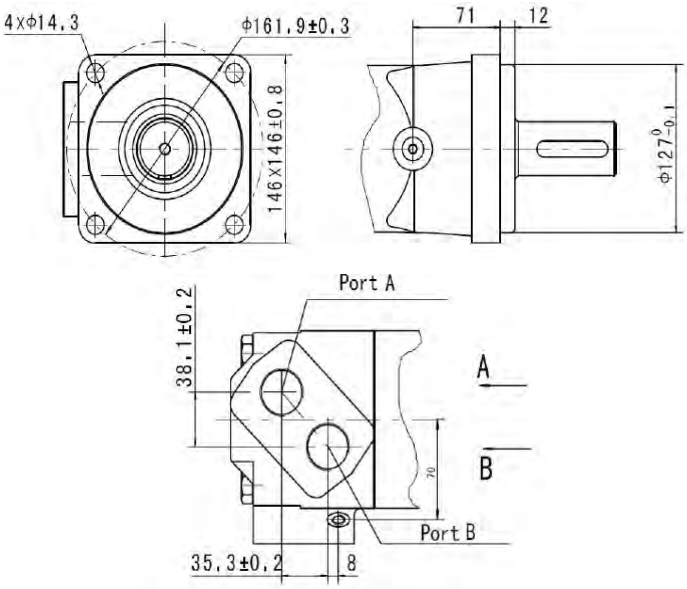

(M)

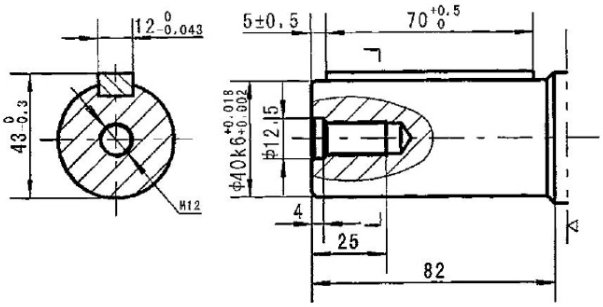
12 0 -0.043
5±0.5
70 +0.5 0
43 0 -0.3
φ10k6 +0.018 +0.002
φ12.5
M12
4
25
82

(G)

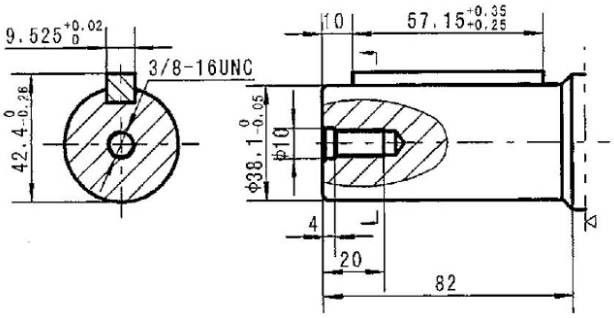
9.525 +0.02 0
10
57.15 +0.35 +0.25
3/8-16UNC
42.4 0 -0.28
φ38.1 0 -0.05
φ10
4
20
82

(G1)

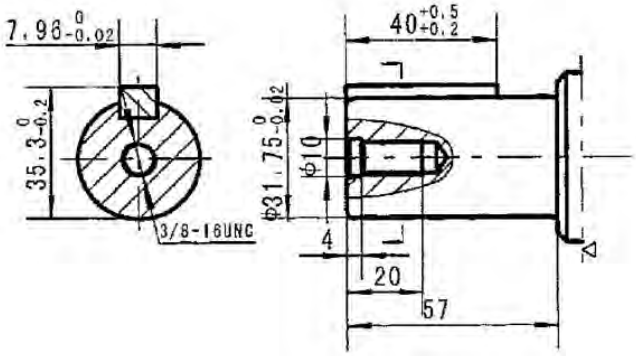
7.96 0 -0.02
40 +0.5 +0.2
35.3 0 -0.2
φ31.75 0 -0.02
φ10
3/8-16UNC
4
20
57

(B)

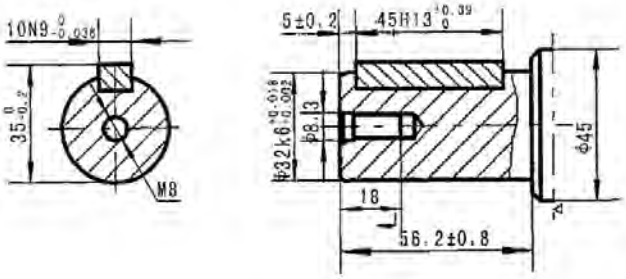
10N9 0 -0.036
5±0.2
45H13 +0.39 0
35 0 -0.2
φ32k6 +0.018 +0.002
φ8.13
φ45
M8
18
56.2±0.8

BMV Series

Size:		BMV315	BMV400	BMV500	BMV630	BMV800
List Price $		**2112.00**	**2163.00**	**2266.00**	**2730.00**	**2833.00**
CC		333	419	518	666	801
Ports		1" BSPP (A+B), 1/4" BSPP drain				
Flange options **(B)**		**(4)** 4 bolt square **(W)** 4 bolt wheel mount				
Shaft options **(C)**		**(C)** 2.1/4" keyed **(A)** 50mm keyed **(B)** 16T spline				
Part Number build = Size + **(B)** + **(C)** e.g. BMV315-4-C						
Max Speed Cont	Rpm	510	500	400	320	250
Max Speed Int		630	600	480	380	300
Pressure Cont	Bar	200	200	200	180	160
Pressure Int		240	240	240	210	180
Pressure Peak		280	280	280	240	210
Max Torque Cont	Nm	920	1180	1460	1660	1880
Max Torque Int		1110	1410	1760	1940	2110
Max Torque Peak		1290	1640	2050	2210	2470
Max Output Cont	kW	38	47	47	40	33
Max Output Int		46	56	56	56	44
Max Flow Cont	lpm	160	200	200	200	200
Max Flow Int		200	240	240	240	240
Weight	kg	31.8	32.6	33.5	34.9	36.5
Dimension L	mm	217	224	232	244	255
Dimension L1		20	27	35	47	58
A/B		G1"				
C		M12				
T		G1/4"				

Seal Kit

Part Number	List Price $
BMV-SK	**155.00**

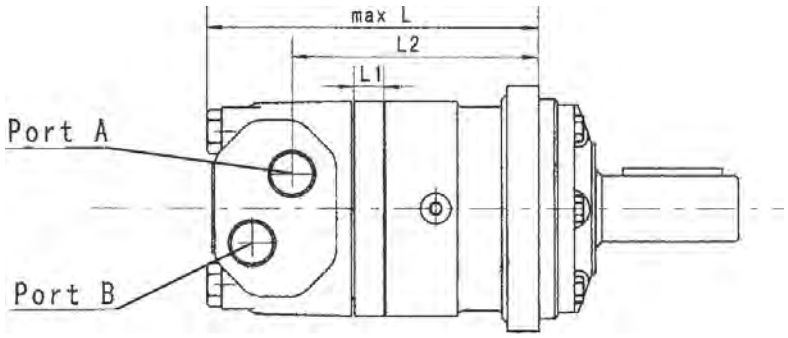

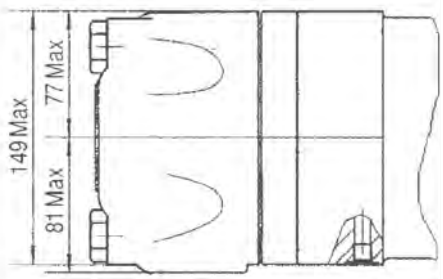

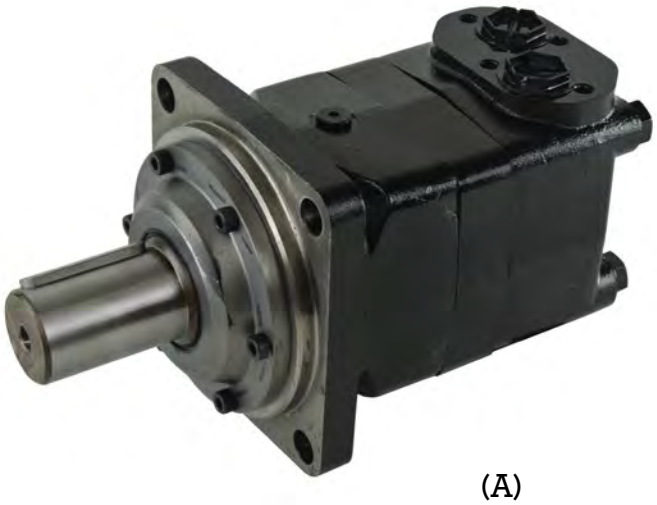

(Porting - D, M)

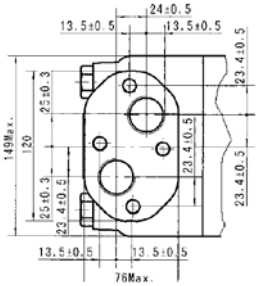

(A)

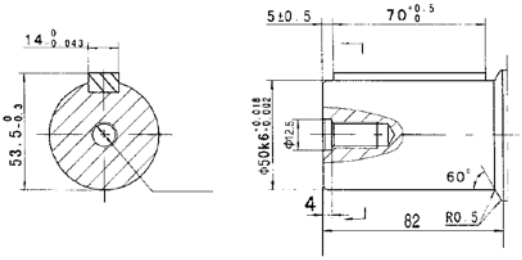

(4)

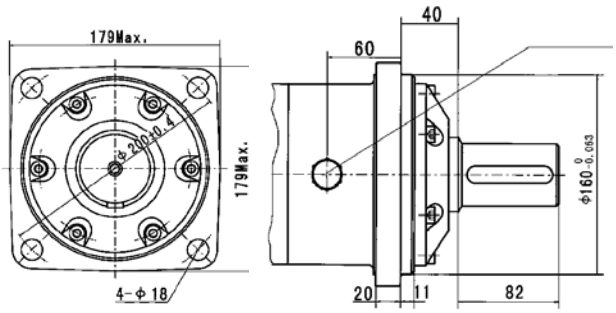

(B)

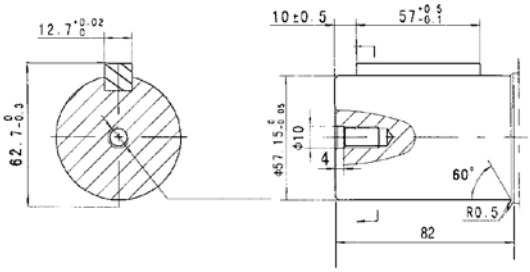

(W)

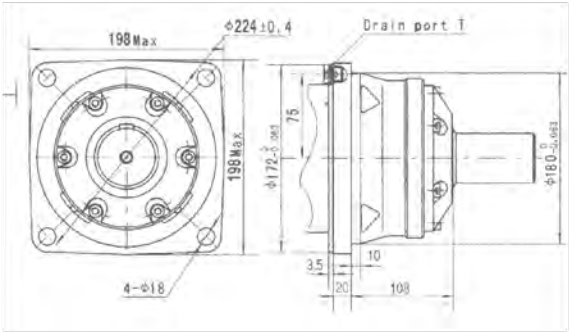

(C)

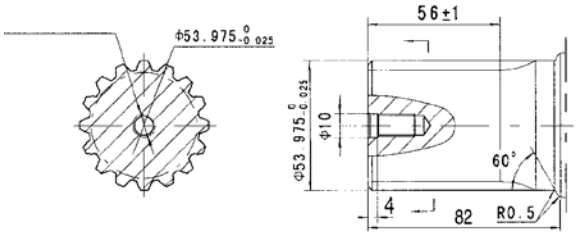

BK2 Series Brake

Part Number	List Price $	Min Operating Pressure	Maximum Pressure	Input Shaft	Output Shaft	Min Static Torque
BK2-1-430-CCB	**800.00**	17-23 bar	300 bar	1" SAE-A	1" SAE-A	410-450 Nm
BK2-2-430-GCB	**800.00**			1" SAE-A	1.1/4" SAE-B	

BK2-1

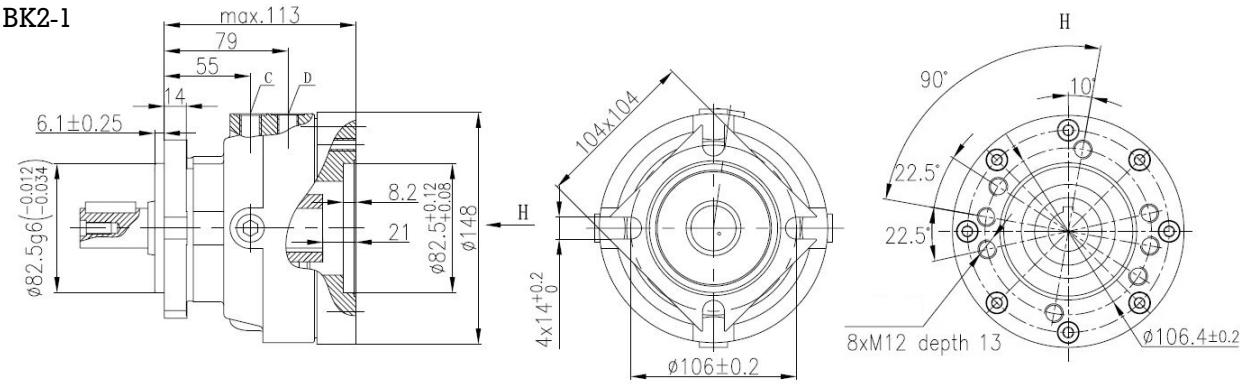

BK2-2

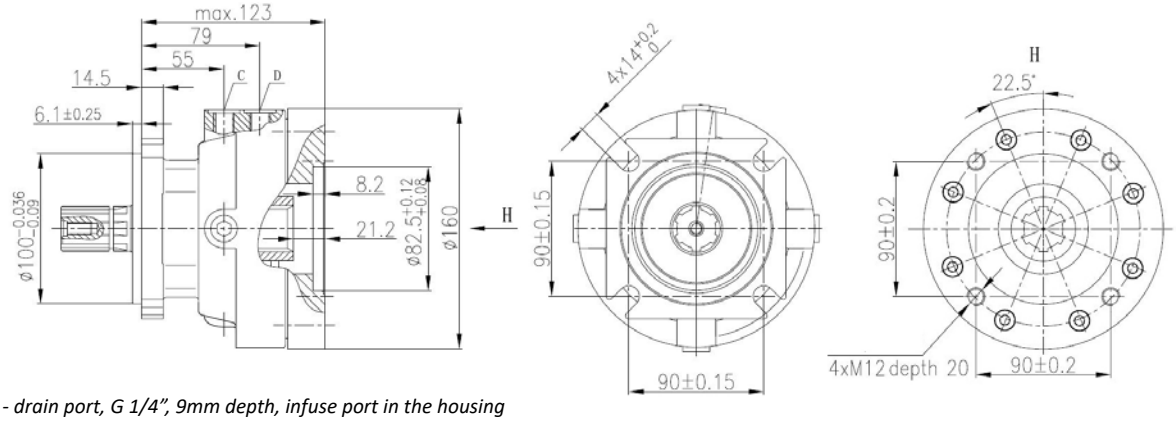

C - drain port, G 1/4", 9mm depth, infuse port in the housing
D - brake release port, G 1/4", 9mm depth

Typical system assembly

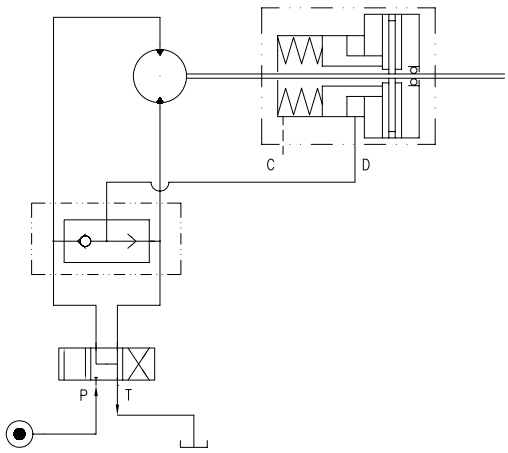

Cross Line Relief Valves

Part Number	List Price $	Max Flow Rate	Pressure Range	Series	A+B Ports	Bolts
DCF1201	216.00	40 lpm	10-110 bar	BMP/BMR	1/2" BSPP	M8x40 cap screw
DCF1202	216.00		20-210 bar			
DCF1203	216.00		70-350 bar			
DCM1201	216.00		10-110 bar	BMSY		M10x40 cap screw
DCM1202	216.00		20-210 bar			
DCM1203	216.00		70-350 bar			

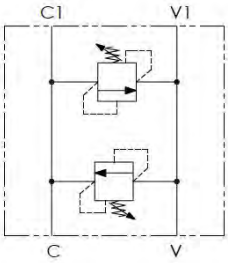

Shuttle Valves

Part Number	List Price $	Max Flow Rate	Max Pressure	Series	A+B Ports	C Port	Bolts
FSRDB	263.00	60 lpm	300 bar	BMP/BMR	1/2" BSPP	1/4" BSPP	M8x40 cap screw (x4)
FSSDB	263.00			BMSY			M10x40 cap screw (x2)

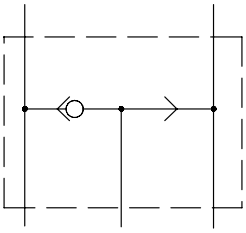

Counter Balance Valves

Part Number	List Price $	Max Flow Rate	Max Pressure	Series	A+B Ports	C Port	Bolts
FPRDDB	371.00	60 lpm	70-250 bar	BMP/BMR	1/2" BSPP	1/4" BSPP	M8x50 cap screw (x4)
CBDLSFOMS-03	618.00		100-350 bar	BMSY			M8x80 cap screw (x4)

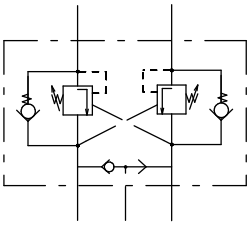

NEW Dual Counterbalance Valves (BMP/BMR)

Part Number	List Price $	Max Flow Rate	Pressure Range	Series	A+B Ports	Ratio	Bolts
DCVB1201S	**450.00**	60 lpm	30-210 bar	BMP/BMR	1/2" BSPP	1:4.25	

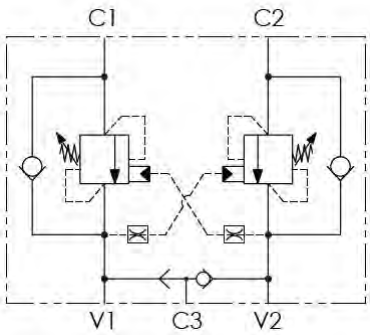

NEW Single Counterbalance Valves (BMP/BMR)

Part Number	List Price $	Max Flow Rate	Pressure Range	Series	A+B Ports	Ratio	Bolts
SCVB1201S	**405.00**	60 lpm	30-210 bar	BMP/BMR	1/2" BSPP	1:4.25	

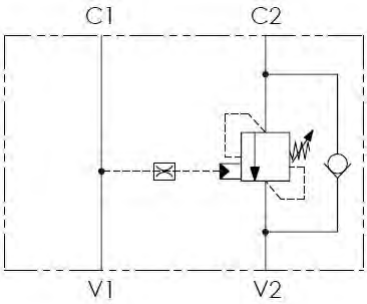

NEW Planetary Wheel Drive

Motor Info	BMS80	BMS100	BMS125	BMS160	BMS200	BMS250	BMS315	BMS400
List Price $	**3250.00**	**3320.00**	**3350.00**	**3370.00**	**3400.00**	**3420.00**	**3440.00**	**3480.00**
L1 (mm)	13	17	22	27.5	35.1	47	59	71
L2 (mm)	69	73	78	83.5	91.1	103	115	127
L (mm)	134.5	138.5	143.5	149	157	169	181	193

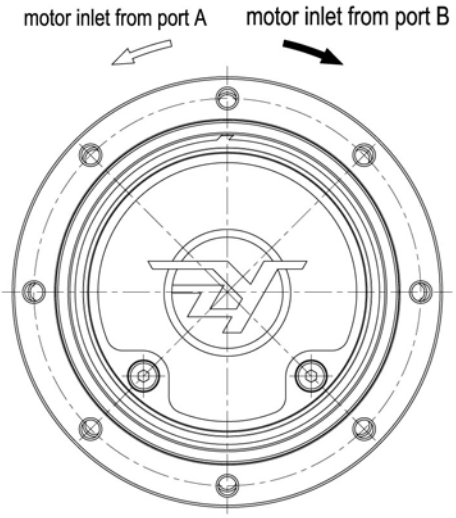

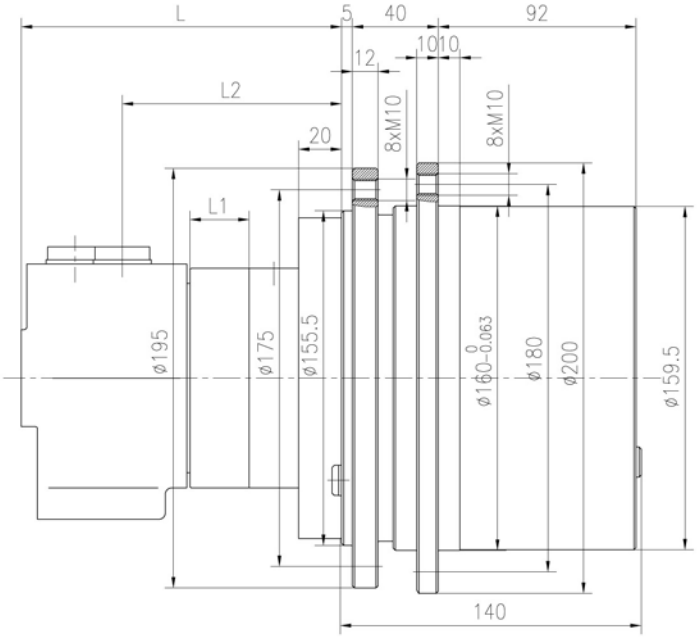

WGB150 WITH BMS 125, Main specifications as follows

Main specifications of WGB 150

WGB150		5.75	4.6	3.28
specificaftion Motor	Motor BMS125	125	125	125
	pressure drop MPa	15.4	15.4	16.2
	flow L/min	73.3	73.3	69.7
	torque N·m	260.9	260.9	274.4
	speed rpm	539.5	539.5	512.9
Output speed rpm		93.8	117.3	156.4
Output torque N·m		1500	1200	900
Output power kW		14	14	14

Main specifications of the non-standard motor with WGB150 will be calculated upon hydraulic motor.
The max. output torque of WGB 150 is 1500 Nm, the max. output power is 14 kW.