CATFORD ENGINEERING PRODUCTS

Jamestown
SA 5491

All Prices Excluding GST

Phone: 0418 641 566

www.catford.com.au sales@catford.com.au

Tank & Tank Accessories

*Steel Tanks *Lids & Gaskets
*Push In & Threaded Filler Breathers
*Sight Gauges & Diffusers *Level Gauges
*Suction Strainers

Lot 25, Mannanarie Road, Jamestown, South Australia 5491

PO Box 178, Jamestown, South Australia 5491

0418 641 566

sales@catford.com.au

Due to fluctuations in the Australian dollar and the economic climate, please be advised that all prices are subject to change.
Please contact us to confirm pricing.

All prices stated within are exclusive of GST
(All prices are correct as of January 1st 2021, but Catford Engineering reserve the right to change these prices without notice)

Tanks & Tank Accessories

CATFORD ENGINEERING PRODUCTS

Jamestown
SA 5491

Phone: 0418 641 566
www.catford.com.au sales@catford.com.au

Industrial Steel Tanks 170

Tank Lid Gaskets 170

Tank Lids 170

Magnetic Drain Plugs & Filter Rods 172

Filler & Threaded Breathers 173

Filler & Threaded Breathers 174

Suction Strainers 175

Diffusers 176

Venting Plugs 176

Sight Gauges 177

Level Gauges 179

Level Gauges 181

Electrical Level Gauges 182

PREMIUM ITALIAN PRODUCT

AUSTRALIAN MADE PRODUCT

Industrial Steel Tanks

Part Number	List Price $		Useable Litres	Volume	Tank Size (mm)			Total Unit Height (mm)
	Uncoated	Coated			L	W	H	
SE10LT (aluminium)	**216.00**	**n/a**	10 L	12 L	310	240	207	225
IT-25	**639.00**	**788.00**	25 L	28 L	360	360	220	225
IT-40	**803.00**	**953.00**	40 L	60 L	500	350	350	450
IT-70	**958.00**	**1154.00**	70 L	100 L	600	425	400	500
IT-120	**1463.00**	**1700.00**	120 L	165 L	700	500	475	575
IT-200	**1524.00**	**1849.00**	200 L	260 L	800	600	550	650
IT-300	**1761.00**	**2122.00**	300 L	380 L	900	700	600	700
IT-400	**2225.00**	**2611.00**	400 L	500 L	900	700	800	900

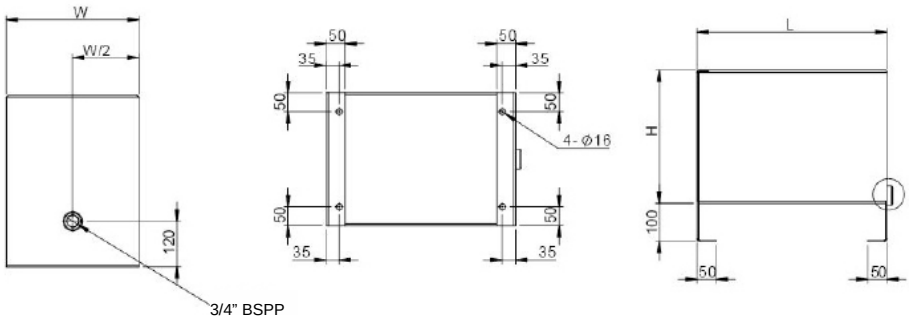

Tank Lid Gaskets

Part Number	List Price $	Material	Size
GUS10	**17.00**	Paper	To suit 10 L tank
ITG-25C	**57.00**	Cork	To suit 25 L tank
ITG-40C	**67.00**		To suit 40 L tank
ITG-70C	**98.00**		To suit 70 L tank
ITG-120C	**113.00**		To suit 120 L tank
ITG-200C	**196.00**		To suit 200 L tank
ITG-300C	**232.00**		To suit 300/400 L tank

Tank Lids - Uncoated and Uncut

Part Number	List Price $	Description
ITL10	**113.00**	Lid for 10 L tanks - uncoated and lid bolt holes only
ITL25	**124.00**	Lid for 25 L tanks - uncoated and lid bolt holes only
ITL40	**124.00**	Lid for 40 L tanks - uncoated and lid bolt holes only
ITL70	**134.00**	Lid for 70 L tanks - uncoated and lid bolt holes only
ITL120	**155.00**	Lid for 120 L tanks - uncoated and lid bolt holes only
ITL200	**180.00**	Lid for 200 L tanks - uncoated and lid bolt holes only
ITL300	**288.00**	Lid for 300/400 L tanks - uncoated and lid bolt holes only

Suction Butterfly Valves - *see pages 308*

Tank Lids - Coated and Cut

Part Number	List Price $	Tank Size	Motor Size	Breather	Filter	Manifold
ITL10-90-M3	**129.00**	10 L	D80-90	FB3	n/a	2-6 CT3 valves
ITL10-90-M3-S3						P&T or single CT3 valve
ITL10-RFB	**113.00**		n/a		TIFP04	n/a
ITL25-71-M3	**185.00**	25 L	D71	FB3	FIF04	2-6 CT3 valves
ITL25-71-S3						P&T or single CT3 valve
ITL25-90-M3			D80-90			2-6 CT3 valves
ITL25-90-S3						P&T or single CT3 valve
ITL25-100-M3			D100-112			2-6 CT3 valves
ITL25-100-S3						P&T or single CT3 valve
ITL25-RFB			n/a	FB6		n/a
ITL40-71-M3	**185.00**	40 L	D71	FB3	FIF-04	2-6 CT3 valves
ITL40-71-S3						P&T or single CT3 valve
ITL40-90-M3			D80-90			2-6 CT3 valves
ITL40-90-S3						P&T or single CT3 valve
ITL40-100-M3			D100-112			2-6 CT3 valves
ITL40-100-S3						P&T or single CT3 valve
ITL40-RFB			n/a	FB6	TIFP06	n/a
ITL70-90-M3	**206.00**	70 L	D80-90	FB6	FIF-06/08	2-6 CT3 valves
ITL70-90-S3						P&T or single CT3 valve
ITL70-100-M3			D100-112			2-6 CT3 valves
ITL70-100-S3						P&T or single CT3 valve
ITL70-132-M3			D132			2-6 CT3 valves
ITL70-132-S3						P&T or single CT3 valve
ITL70-RFB			n/a		TIFP06	n/a
ITL120-100-M3	**270.00**	120 L	D100-112	FB6	FIF-06/08	2-6 CT3 valves
ITL120-100-S3						P&T or single CT3 valve
ITL120-132-M3			D132			2-6 CT3 valves
ITL120-132-S3						P&T or single CT3 valve
ITL120-160-M5			D160-180		FIF-10	2-6 CT3 valves
ITL120-160-S5						P&T or single CT3 valve
ITL120-RFB			n/a		TIFP10	n/a
ITL200-132-M5	**290.00**	200 L	D132	FB6	FIF-10	2-6 CT5 valves
ITL200-132-S5						P&T or single CT5 valve
ITL200-160-M5			D160-180			2-6 CT5 valves
ITL200-160-S5						P&T or single CT5 valve
ITL200-RFB			n/a		TIFP10	n/a
ITL300-160-M5	**391.00**	300-400 L	D160-180	FB6	FIF-10	2-6 CT5 valves
ITL300-160-S5						P&T or single CT5 valve
ITL300-RFB			n/a		TIFP10	n/a

NEW Magnetic Drain Plugs

Part Number	List Price $	Thread	Description	g	h	f	t	d
				mm				
TCEM0G	**12.00**	1/8" BSPP	Magnetic oil – drain plug with HEX head (supplied with metal washer)	3	4	8	3	14
TCEM1G	**12.00**	1/4" BSPP		5	5	12	3	18
TCEM2G	**13.00**	3/8" BSPP		5	5	12	3	22
TCEM3G	**18.00**	1/2" BSPP		6	5	14	4	26
TCEM4G	**28.00**	3/4" BSPP		10	6	16	4	32
TCEM5G	**33.00**	1" BSPP		10	6	16	5	40
TCEM6G	**64.00**	1.1/4" BSPP		15	10	16	5	49

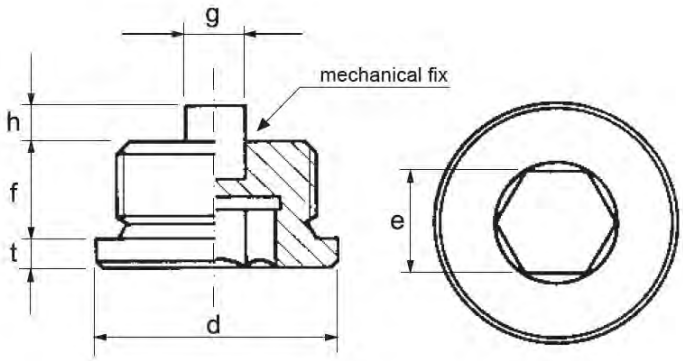

NEW Magnetic Filter Rods

Part Number	List Price $	Thread	Description	t	f	l	h	g
				mm				
FMC1G	**76.00**	3/8" BSPP	Magnetic oil – drain plug with HEX slot (supplied with metal washer)	7	10	80	70	9
FMC2G	**92.00**	1/2" BSPP		8.5	10	95	85	12
FMC3G	**121.00**	3/4" BSPP		9.5	12	102	90	17
FMC4G	**152.00**	1" BSPP		9.5	14	104	90	17

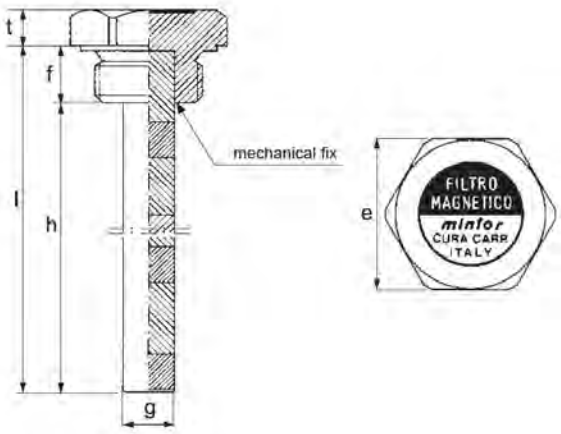

NEW Filler Breathers

Part Number	List Price $	Thread	Micron		Material	d	g	f	h	i	c	e
						mm						
TRTCSF/Z	78.00	1" BSPP	Filler	800 µm	Aluminium	45	33.3	14	42	82	25	40
			Breather	40 µm								
TRTCSF/Z-NUT	9.00	Backing nuts to suit M12x1.75 thread (sold individually)										

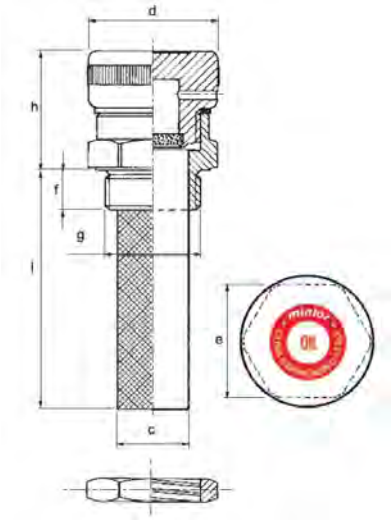

NEW Threaded Breathers

Part Number	List Price $	Thread	Material	h	f	i	g	d
						mm		
TCLS/Z1G	15.00	1/4" BSPP	Aluminium	12	8	120	5	22
TCLS/Z2G	16.00	3/8" BSPP		13.5	10	170	5	26
TCLS/Z3G	19.00	1/2" BSPP		16.5	10	170	5	30
TCLS/Z4G	26.00	3/4" BSPP		21.5	12	200	5	40
TCLS/Z5G	36.00	1" BSPP		21.5	14	200	5	45

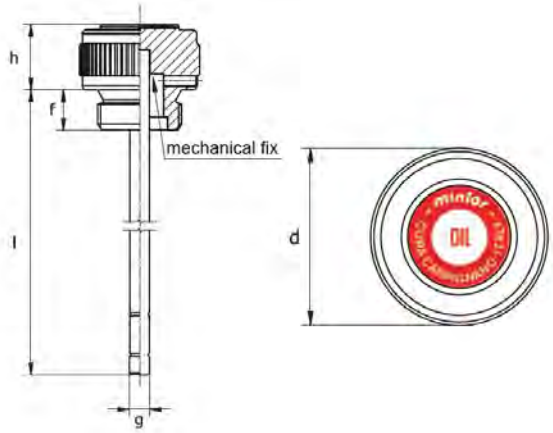

Filler Breathers

Part Number	List Price $	Max Flow	Micron	Mount	Material
FB3	**25.00**	90 lpm	10 µm	3 bolt - PCD 41.3mm	Chrome Steel
FB6	**41.00**	400 lpm		6 bolt - PCD 71.5mm	Chrome Steel
FSBP	**52.00**			6 bolt - PCD 71.5mm	Polyamide
FB6LT	**48.00**			6 bolt - PCD 71.5mm, lock tab	Chrome Steel
FB6HN	**54.00**			6 bolt - PCD 71.5mm, high neck	Chrome Steel
FB6P5	**59.00**			6 bolt - PCD 71.5mm, pressure valve 5psi	Chrome Steel
FB6SM	**74.00**			6 bolt - side mount	Ch.Steel/Aluminium
PB25	**31.00**	720 lpm	40 µm	Push fit 1-1/2”	Chrome Steel

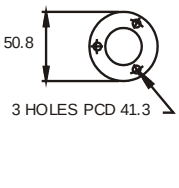

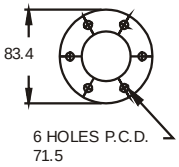

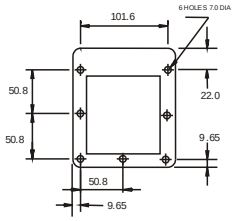

Threaded Breathers

Part Number	List Price $	Max Flow	Micron	Thread	Material
TB14	**21.00**	90 lpm	10 µm	1/4” BSPP	Chrome/Steel
TB38	**21.00**			3/8” BSPP	
TB12	**37.00**	400 lpm		1/2” BSPP	
TB34	**37.00**			3/4” BSPP	
TB34P5 (pressurised 5psi)	**55.00**				
TB1	**42.00**			1” BSPP	
TB114	**70.00**	1000 lpm		1.1/4” BSPP	Polyamide
TB112	**70.00**			1.1/2” BSPP	
TB2	**92.00**	2000 lpm		2” BSPP	
TB212	**132.00**	4000 lpm		2.1/2” BSPP	
ABP03B	**8.00**	n/a	40 µm	3/8” BSPP	
ABP04B	**9.00**			1/2” BSPP	
ABP06B	**12.00**			3/4” BSPP	
ABP08B	**15.00**			1” BSPP	

Suction Strainer

Part Number	List Price $	Micron	Flow	A	B	C mm	A/F
SS14	**17.00**	149 µm	8 lpm	1/4" BSPP	90	46	24
SS38	**19.00**		12 lpm	3/8" BSPP	90	46	24
SS12	**20.00**		20 lpm	1/2" BSPP	105	46	30
SS34	**25.00**		28 lpm	3/4" BSPP	109	64	35
SS1	**27.00**		40 lpm	1" BSPP	139	64	46
SS114	**38.00**		60 lpm	1.1/4" BSPP	139	86	51
SS112	**48.00**		120 lpm	1.1/2" BSPP	200	86	60
SS2	**57.00**		160 lpm	2" BSPP	235	100	70
SS212	**99.00**		300 lpm	2.1/2" BSPP	211	150	90
SS3	**122.00**		400 lpm	3" BSPP	272	150	100

Suction Strainer with Relief

Part Number	List Price $	Micron	Flow	A	B	C mm	A/F
SS14B3	**23.00**	149 µm	8 lpm	1/4" BSPP	90	46	24
SS38B3	**25.00**		12 lpm	3/8" BSPP	90	46	24
SS12B3	**27.00**		20 lpm	1/2" BSPP	105	46	30
SS34B3	**33.00**		28 lpm	3/4" BSPP	109	64	35
SS1B3	**36.00**		40 lpm	1" BSPP	139	64	46
SS114B3	**49.00**		60 lpm	1.1/4" BSPP	139	86	51
SS112B3	**60.00**		80 lpm	1.1/2" BSPP	168	86	60

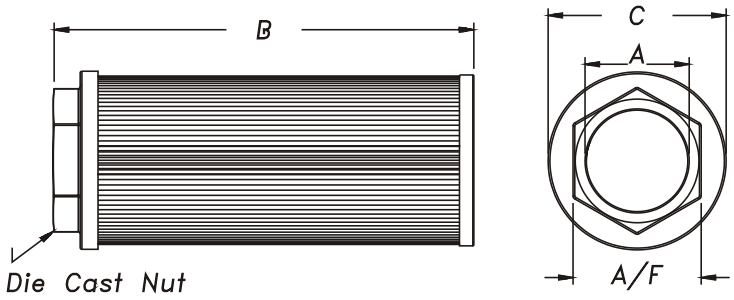

Diffusers

Part Number	List Price $	Size A	Flow
DIF34	**28.00**	3/4" BSPP	50 lpm
DIF1	**39.00**	1" BSPP	100 lpm
DIF114	**42.00**	1.1/4" BSPP	200 lpm

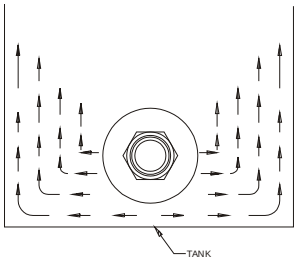

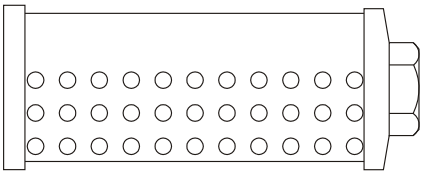

NEW Venting Plug

Part Number	List Price $	Thread	Description	Material	t	f mm	e
TSVV1G	**23.00**	1/4" BSPP	Normally closed to atmosphere With 2-way adjustable venting Pressure 0-10 Bar	Aluminium	10	10	17
TSVV2G	**24.00**	3/8" BSPP			10	10	22
TSVV3G	**30.00**	1/2" BSPP			10	10	27

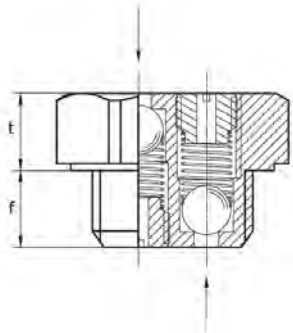

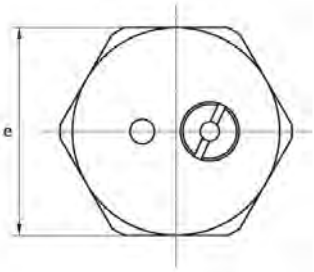

NEW Sight Gauges

Part Number	List Price $	Thread	Material	f	t	v	e	c
				mm				
IFC0G	**14.00**	3/8" BSPP	Aluminium	9	6	16	24	9
IFC1G	**16.00**	1/2" BSPP		10	9.5	16	27	9
IFC2G	**18.00**	3/4" BSPP		11	10	16	32	9
IFC3G	**25.00**	1" BSPP		14	10	19	40	13
IFC4G	**48.00**	1.1/4" BSPP		15	10.5	25	50	17
IFC5G	**55.00**	1.1/2" BSPP		15	10.5	33	55	23
IFC6G	**104.00**	2" BSPP		15	14	36	70	24

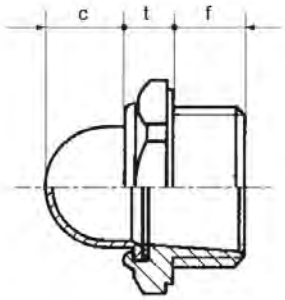

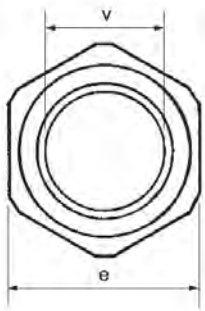

NEW Sight Gauges

Part Number	List Price $	Thread	Material	f	t	v	e
				mm			
TLA1G	**11.00**	1/4" BSPP	Aluminium	8	7	10	17
TLA2G	**12.00**	3/8" BSPP		10.5	7	13	22
TLA3G	**14.00**	1/2" BSPP		11	9	16	27
TLA4G	**16.00**	3/4" BSPP		12	9	21	32
TLA5G	**23.00**	1" BSPP		15.5	10	27	40
TLA6G	**44.00**	1.1/4" BSPP		15	10	37	40
TLA7G	**51.00**	1.1/2" BSPP		15	10	40	55
TLA8G	**99.00**	2" BSPP		17	14	50	70

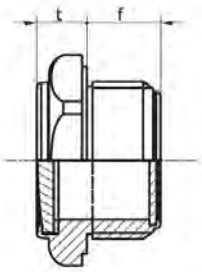

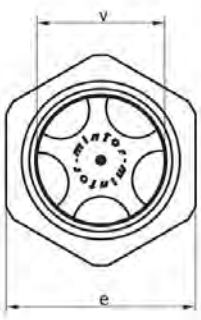

Sight Gauges

Part Number	List Price $	Material	A	B	F
SG38	**12.00**	Steel	3/8" BSPP	10mm	22mm
SG12	**14.00**		1/2" BSPP	14mm	25mm
SG34	**17.00**		3/4" BSPP	20mm	32mm
SG1	**19.00**		1" BSPP	24mm	38mm
SG114	**24.00**		1.1/4" BSPP	33mm	44mm
SG112	**28.00**		1.1/2" BSPP	39mm	55mm

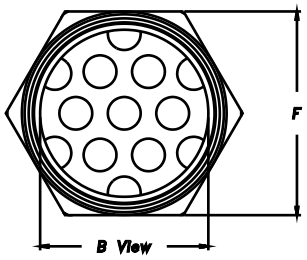

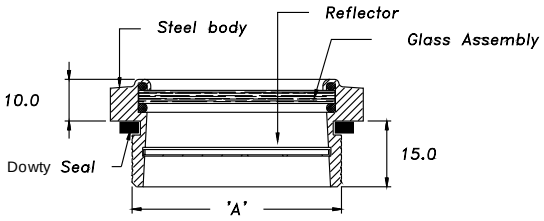

Sight Gauge Weld Flanges

Part Number	List Price $	Material	A	B	C mm	D	E
SGWN38	**8.00**	Steel	38.10	23.62	14.22	7.87	25.40
SGWN12	**8.00**		54.10	35.05	17.52	11.17	36.57
SGWN34	**12.00**		54.10	35.05	17.52	11.17	36.57
SGWN1	**16.00**		60.45	42.16	19.05	12.70	44.45
SGWN114	**18.00**		68.32	50.80	19.05	12.70	54.10
SGWN112	**23.00**		76.20	57.15	21.74	19.05	60.45

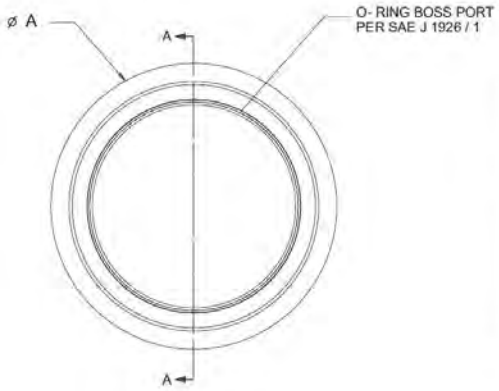

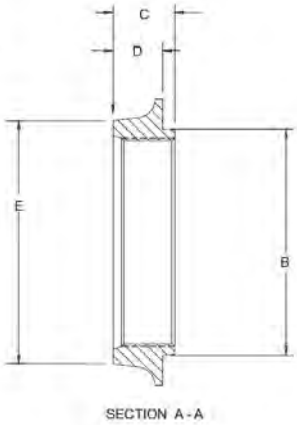

NEW Flanged Vertical Level Gauge

Part Number	List Price $	Material	L	R	l	R	V1	V2	h	a
			mm							
LVF 60	139.00	Aluminium	60	45	28	35	39	18	11.5	4
LVF 80	164.00		80	45	45	35	59	18	11.5	4
LVF 100	173.00		100	45	35	35	78	18	11.5	4

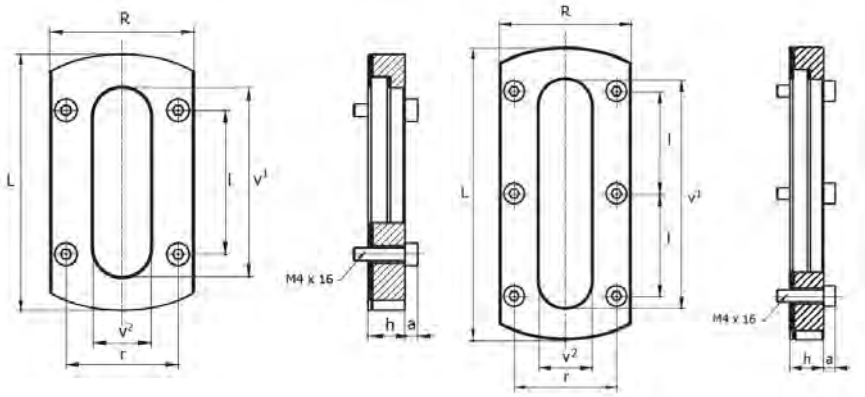

NEW Inspection Port Hole

Part Number	List Price $	Material	v	d	i	s
			mm			
OBLO-100	165.00	Aluminium housing	100	150	130	19.5
OBLO-148	225.00		148	202	180	21.5

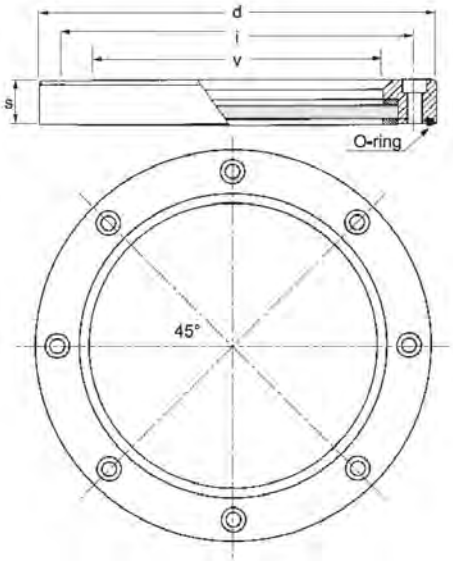

OLBO-100

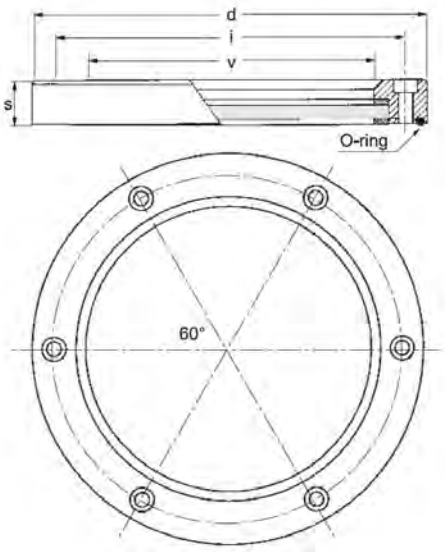

OLBO-148

NEW Vertical Level Indicator (Float System)

Part Number	List Price $	Material	L	d	h	l	r
					mm		
LGF681	188.00	Flange cover aluminium	200	80	16	203	68
LGF682	190.00		250	80	16	253	68
LGF683	191.00		300	80	16	303	68
LGF684	193.00		350	80	16	353	68
LGF685	195.00		400	80	16	403	68

Note: When choosing length, the gauge must not be below the pump suction.

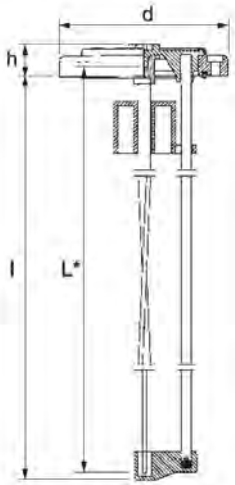

NEW Level Gauge

Part Number	List Price $	Material	a	L	b	e	q	d	c	f	l
							mm				
GLV1G	186.00	Aluminium	M12x1.75	500	40	22	30	22	43	10	530
GLV2G	220.00			1000	40	22	30	22	43	10	1030
GLV-2IDAD2OS	1.00	Backing nuts to suit M12x1.75 thread (sold individually)									

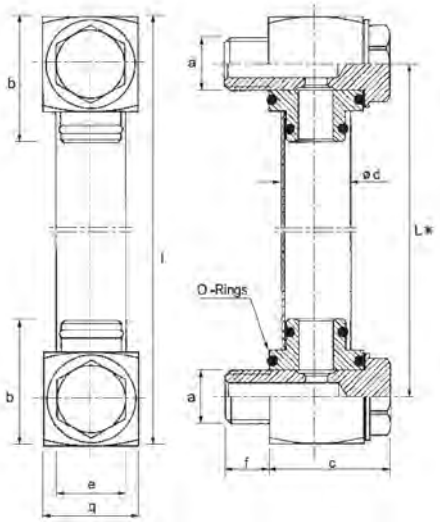

Level Gauges 3" & 5" (76mm & 127mm)

Part Number	List Price $	Type	A	B	C mm	D	F	M
LG1	30.00	Level	76.2	32	23	35	111	M10
LGT1	36.00	Level - Temperature						
LG2	33.00	Level	127	76	23	35	162	M12
LGT2	38.00	Level - Temperature						

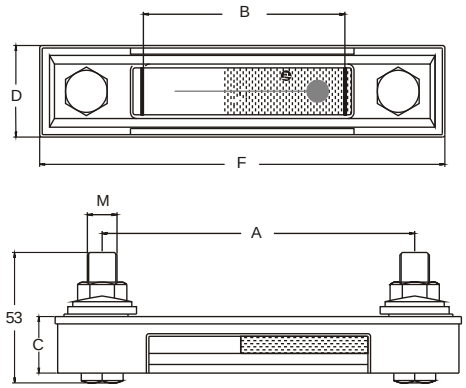

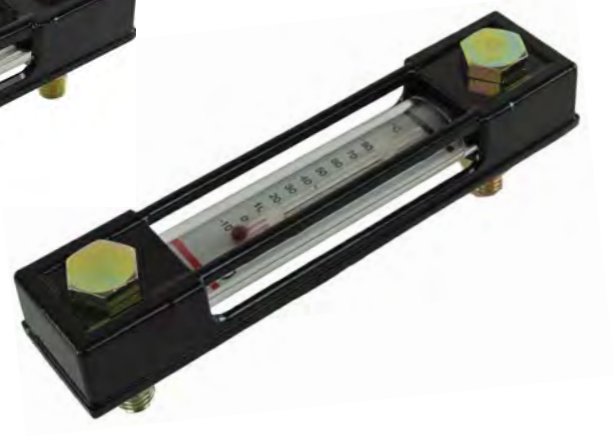

Level Gauges 10" (254mm)

Part Number	List Price $	Type	A	B	C mm	D	F	M
LG3	52.00	Level	254	200	23	35	289	M12
LGT3	58.00	Level - Temperature						

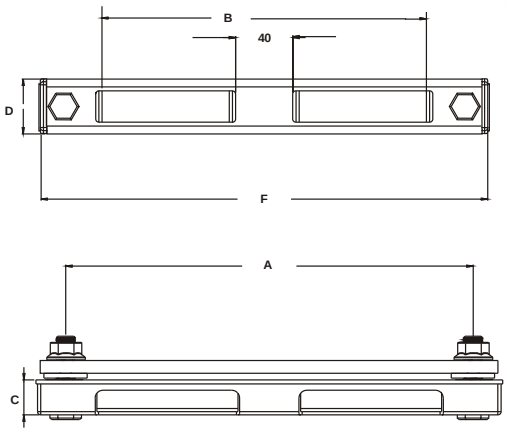

NEW Electrical Level Gauges

Part Number	List Price $	Material	a	L	e	q	d	c	f	s	l
			mm								
GLVE1G	340.00	Aluminium	M12x1.75	500	22	30	22	43	10	65	530
GLVE2G	381.00		M12x1.75	1000	22	30	22	43	10	65	1030
GLV-2IDAD2OS	1.00	Backing nuts to suit M12x1.75 thread (sold individually)									

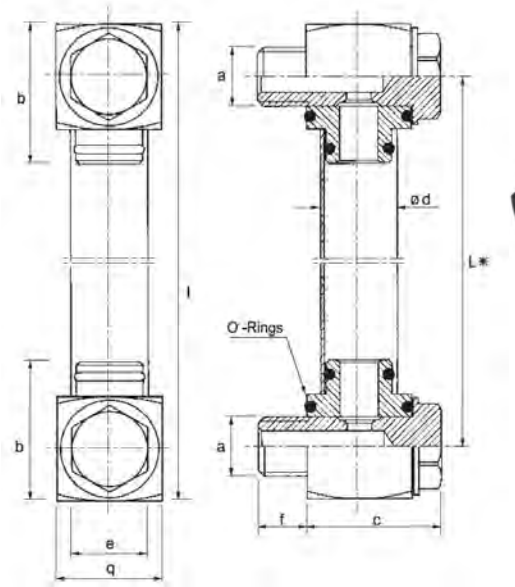

Electrical Information	
Contact	N/O
Sensing	Min and max oil level
AC	140v AC
DC	200v DC
Amps	0.5a
Watts	10w

NEW Electrical Level Gauges

Part Number	List Price $	Material	L	r	v	C	i	f	h	a	b	s
			mm									
PLE2	305.00	Aluminium	160	34	88	16.5	127	M12	21.5	16	29	59
PLE3	362.00		287	34	215	16.5	254	M12	21.5	16	29	59

Eletrical Information	
Contact	N/O
Sensing	Min oil level
Lead Length	2500mm
AC	250v AC
DC	250v DC
Amps	0.5a
IP	IP67

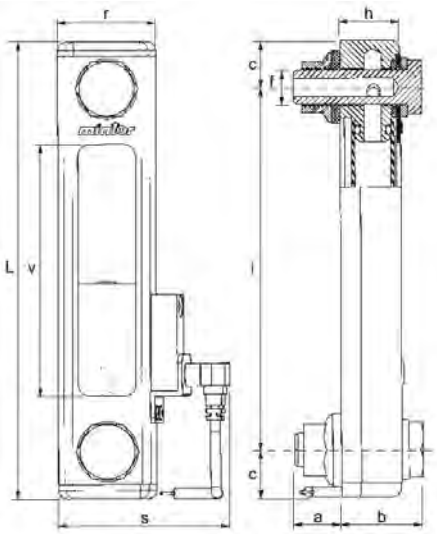

Electrical Level Gauges 3"

Part Number	List Price $	M	A	H	Description
LVK10AM121SSP01	319.00	M12	76mm	108mm	Low level - N/O switch
LVK10AM121PSP01	541.00				Low level - N/O switch, PT100 temp sensor

Electrical Level Gauges 5"

Part Number	List Price $	M	A	H	Description
LVK20AM121SSP01	371.00	M12	127mm	159mm	Low level - N/O switch
LVK20AM121PSP01	567.00				Low level - N/O switch, PT100 temp sensor
LVK20AM121T2P01	541.00				Low level - N/O switch, 60° NO temp sensor

Electrical Level Gauges 10"

Part Number	List Price $	M	A	H	Description
LVK30AM121SSP01	515.00	M12	254mm	286mm	Low level - N/O switch
LVK30AM121PSP01	692.00				Low level - N/O switch, PT100 temp sensor
LVK30AM121T2P01	670.00				Low level - N/O switch, 60° NO temp sensor
LVK30AM121T3P01	670.00				Low level - N/O switch, 70° NO temp sensor

Part Number	List Price $	Description
TV12	299.00	Visual temperature gauge

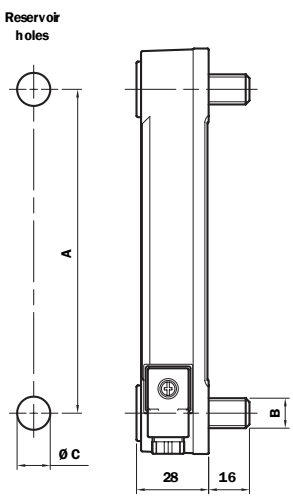

PS type

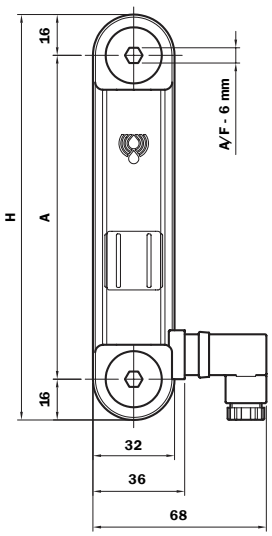

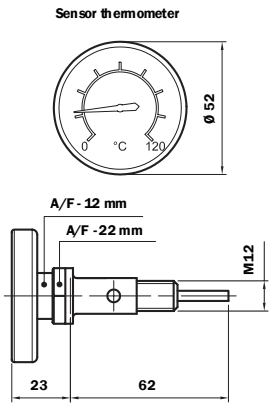

SS type

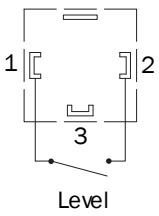

PS type

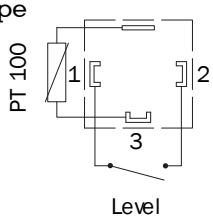
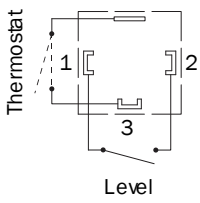
T2 type