CATFORD ENGINEERING PRODUCTS

Jamestown
SA 5491

All Prices Excluding GST

Phone: 0418 641 566

www.catford.com.au sales@catford.com.au

Monoblock Valves

***MB2, MB3, MB4, MB5 & MB6 Monoblock**

***Log Splitter Valves, Remote Contol Accessories**

Lot 25, Mannanarie Road, Jamestown, South Australia 5491

PO Box 178, Jamestown, South Australia 5491

0418 641 566

sales@catford.com.au

Due to fluctuations in the Australian dollar and the economic climate, please be advised that all prices are subject to change.
Please contact us to confirm pricing.

All prices stated within are exclusive of GST
(All prices are correct as of January 1st 2022, but Catford Engineering reserve the right to change these prices without notice)

Monoblock Valves

CATFORD ENGINEERING PRODUCTS

Jamestown
SA 5491

Phone: 0418 641 566
www.catford.com.au sales@catford.com.au

MB2 Monoblock 45 lpm 196
MB2 Options 197
MB3 Monoblock 45 lpm 198
MB3 Options 199
MB4 Monoblock 60 lpm 200
MB4 Options 201
MB5 Monoblock 80 lpm 202
MB5 Options 203
MB6 Monoblock 120 lpm 204
MB6 Options 205
Remote Control Accessories 206
Log Splitter Valves 207

MB2 (45 LPM)

MB2 Monoblock						
Part #	List Price $	Spool	Quantity	Max Flow	Max Pressure	Ports
MB2/1S3/18L/G3	242.00	Cylinder	1	45 lpm	250 bar	3/8" BSPP
MB2/1S3/28L/G3	242.00	Motor	1	45 lpm	250 bar	3/8" BSPP

No power beyond in MB2

Relief valve standard 63-200 bar range

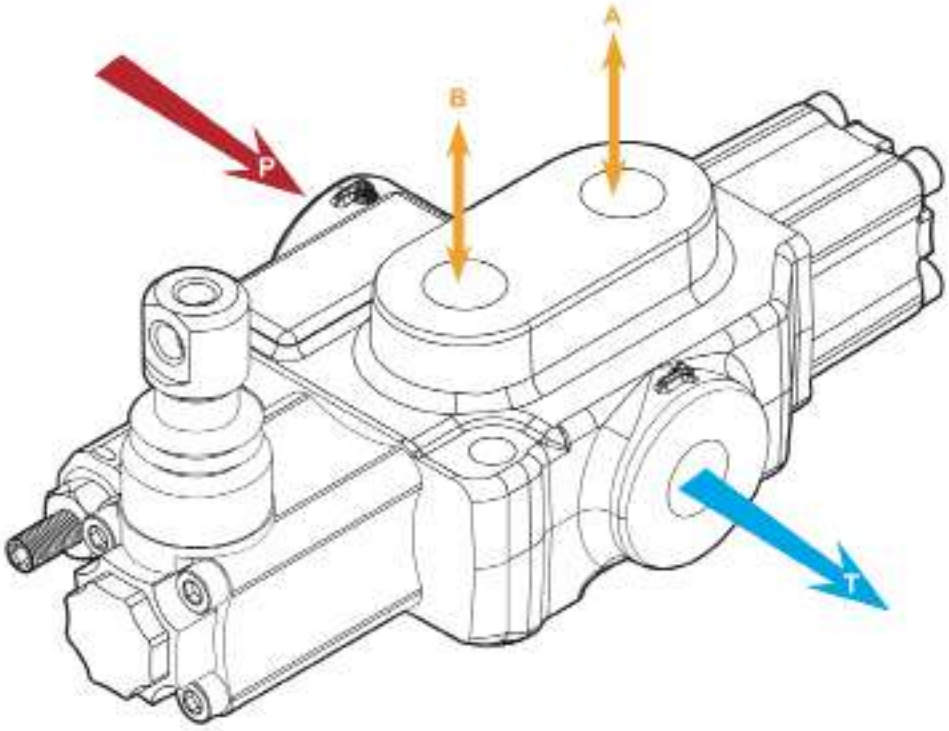

MB2 Options

Part #	List Price $	Description
YLMB24061	52.00	MB2 Detent in A-B, no spring centre
YLMB24062	59.00	MB2 Detent in A only, no spring centre
YLMB24063	59.00	MB2 Detent in B only, no spring centre
YLMB24008	28.00	B-Side Spring centred cap
YLMB24081	33.00	MB2 2 Position kit, spring centred from pos.1
YLMB24082	33.00	MB2 2 Position kit, spring centred from pos.2
YLMB24200	52.00	MB2 B-Side Cable connector kit
YLMB24092	76.00	Detent in A and spring centred spool
YLMB24093	76.00	Detent in B and spring centred spool
YLMB24801	174.00	Microswitch kit operated in pos.1 (Normally Open)
YLMB24802	174.00	Microswitch kit operated in pos.2 (Normally Open)
YLMB24803	174.00	Microswitch kit operated in pos.1&2 (Normally Open)
YLMB23001	68.00	MB2 Cylinder Spool
YLMB23002	68.00	MB2 Motor Spool
YLMB23003	78.00	MB2 Single Acting Spool on A; B port plugged
YLMB23004	78.00	MB2 Single Acting Spool on B; A port plugged

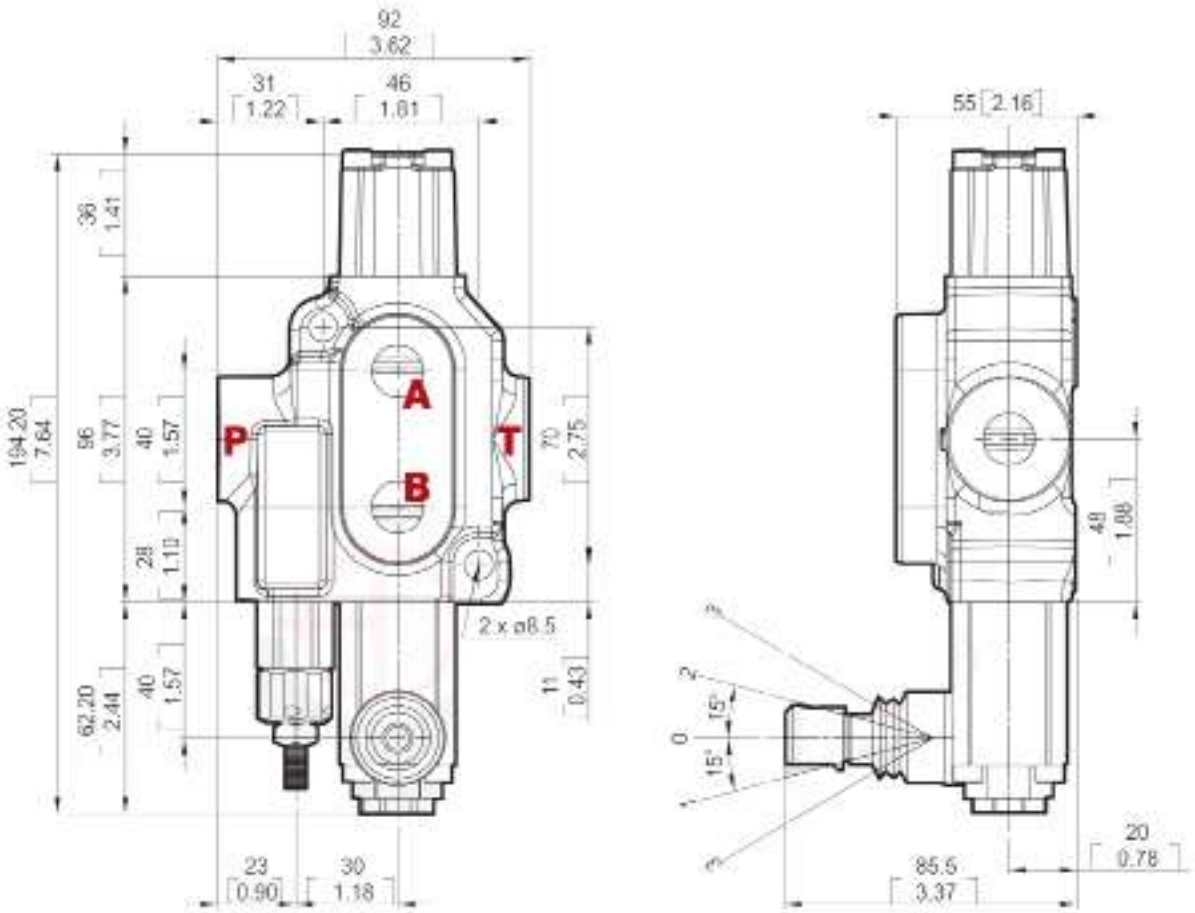

MB3 Monoblock

Part #	List Price $	Spool	Quantity	Max Flow	Max Pressure	Ports
MB3/1S3/18L/G4-3-4	**289.00**	Cylinder	1	45 lpm	315 bar (25 bar on T)	1/2" BSPP (P,T,C) 3/8" BSPP (A,B)
MB3/1S3/28L/G4-3-4	**289.00**	Motor	1			
MB3/1S3/48L/G4-3-4	**300.00**	Single Acting	1			
MB3/2S3/18L/G4-3-4	**450.00**	Cylinder	2			
MB3/3S3/18L/G4-3-4	**485.00**	Cylinder	3			
MB3/4S3/18L/G4-3-4	**750.00**	Cylinder	4			
MB3/5S3/18L/G4-3-4	**912.00**	Cylinder	5			
MB3/6S3/18L/G4-3-4	**1062.00**	Cylinder	6			

MB3 Monoblock with Float Spools

Part #	List Price $	Spool	Quantity	Max Flow	Max Pressure	Ports
MB3/1S3/5PYL/G4-3-4	**445.00**	Cylinder w/ Float	1	45 lpm	315 bar (25 bar on T)	1/2" BSPP (P,T,C) 3/8" BSPP (A,B)
MB3/2S3/5PYL/G4-3-4	**756.00**	Cylinder w/ Float	2			
MB3/2S3/18L/5PYL/G4-3-4	**646.00**	1x Cylinder, 1x Float	2			
MB3/4S3/18L/5PYL/G4-3-4	**1062.00**	2x Cylinder, 2x Float	4			

Relief valve standard 63-200 bar range

PRODUCT UPDATE:
MB3 Monoblocks are no longer supplied with a Power Beyond Plug.
They are available to purchase for $3.00 (Part # YLMB34COP) - see options on next page.

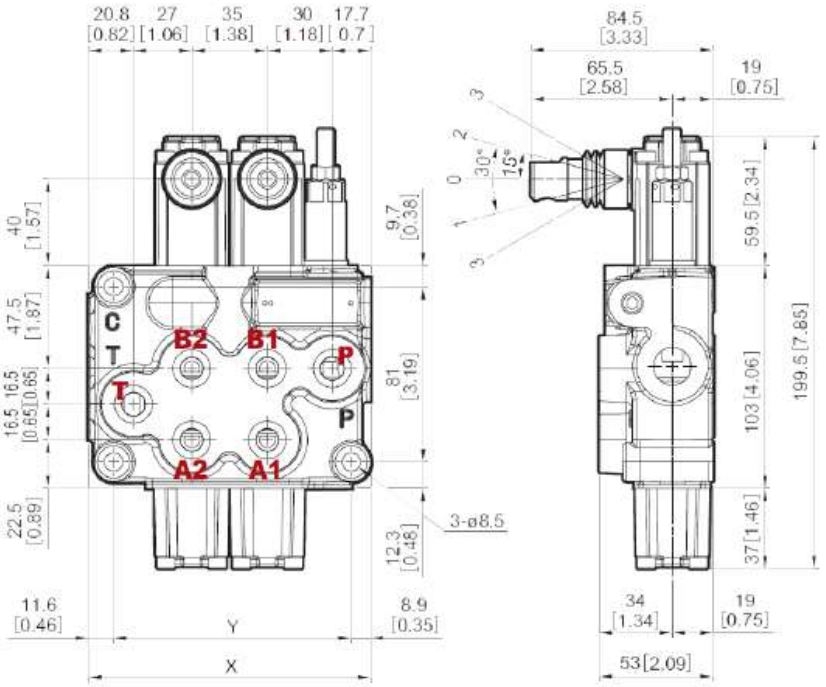

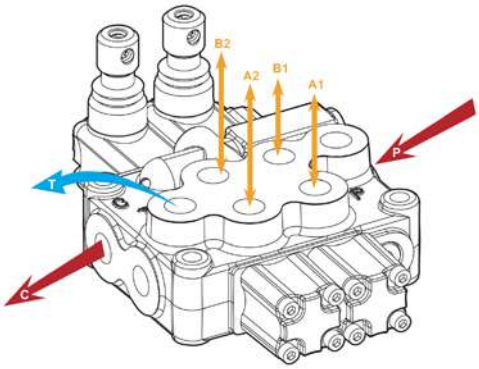

MB3 Dimensions

No. of Spools	X (mm)	Y (mm)	No. of Spools	X (mm)	Y (mm)
1	93.5	73	**4**	202.5	184
2	130.5	110	**5**	239.5	221
3	165.5	147	**6**	275.6	258

MB3 Options

Part #	List Price $	Description
YLMB08160	16.00	Replacement Lever M8 x 160mm
YLMB3SEAL	6.00 > 30.00	Seal kit MB3 - advise number of spools
YLMB33002	30.00	Motor spool
YLMB33003	30.00	Single acting spool on A port
YLMB33004	30.00	Single acting spool on B port
YLMB34COP	3.00	Power Beyond Plug
YLMB44061	49.00	Detent kit, no spring to centre (variations available)
YLMB44091	72.00	Detent kit, spring to centre (variations available)
YLMB44080	203.00	Pneumatic spool positioner
YLMB44080-SK	12.00	Pneuematic Actuator Seal Kit, MB3/MB4
YLMB440810	59.00	Hydraulic Pilot Kit - maximum pressure 50 bar (lever not included - see page 206)
YLMB44300-12V	438.00	Electro-pneumatic spool positioner, 12v DC
YLMB44300-24V	438.00	Electro-pneumatic spool positioner, 24v DC
YLMB44803	164.00	Microswitch kit, normally open, double acting (variations available)
YLMB44805	178.00	Microswitch kit, normally open, double acting for float spool (5PYL)
YLMB45000	48.00	Replacement lever box
YLMB32002	78.00	Relief valve 40-80 bar
YLMB32003	78.00	Relief valve 63-200 bar
YLMB32004	78.00	Relief valve 160-315 bar

MB3 Electrical Options

Part #	List Price $	Voltage	Function	Spool	Manual Lever	Nominal Pres.	Nominal Flow
YLMB34511	481.00	12v DC	D/A	Closed centre	-	250 bar	45 lpm
YLMB34521	481.00	12v DC	D/A	Open centre	-	250 bar	45 lpm
YLMB34512	481.00	24v DC	D/A	Closed centre	-	250 bar	45 lpm
YLMB34522	481.00	24v DC	D/A	Open centre	-	250 bar	45 lpm
YLMB34511L	612.00	12v DC	D/A	Closed centre	Yes	250 bar	45 lpm
YLMB34521L	612.00	12v DC	D/A	Open centre	Yes	250 bar	45 lpm
YLMB34512L	612.00	24v DC	D/A	Closed centre	Yes	250 bar	45 lpm
YLMB34522L	612.00	24v DC	D/A	Open centre	Yes	250 bar	45 lpm
YLMB8ES001	15.00	MB3 8ES Coil Retaining Nut					
YLMB8ES12D	166.00	MB3 8ES Coil 12VDC					
YLMB8ES24D	166.00	MB3 8ES Coil 24VDC					

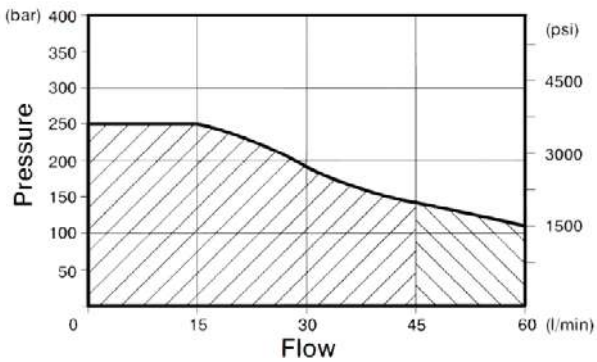

Be sure to consult the above graph when selecting electrical operated valves

36 watt coils

MB4 (60 LPM)

MB4 Monoblock						
Part #	List Price $	Spool	Quantity	Max Flow	Max Pressure	Ports
MB4/1S3/18L/G4	333.00	Cylinder	1	60 lpm	315 bar (25 bar on T)	1/2" BSPP
MB4/1S3/28L/G4	333.00	Motor	1			
MB4/1S3/48L/G4	342.00	Single Acting	1			
MB4/2S3/18L/G4	525.00	Cylinder	2			
MB4/3S3/18L/G4	717.00	Cylinder	3			
MB4/4S3/18L/G4	910.00	Cylinder	4			
MB4/5S3/18L/G4	1102.00	Cylinder	5			
MB4/6S3/18L/G4	1294.00	Cylinder	6			

Relief valve standard 63-200 bar range

PRODUCT UPDATE:
MB4 Monoblocks are no longer supplied with a Power Beyond Plug.
They are available to purchase for $3.00 (Part # YLMB34COP) - see options on next page.

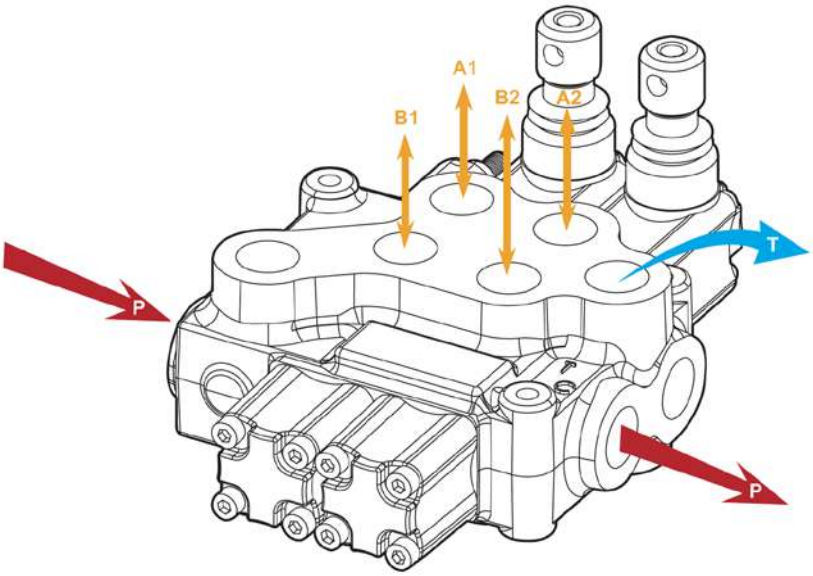

MB4 Options

Part #	List Price $	Description
YLMB08160	16.00	Replacement Lever M8 x 160mm
YLMB34COP	3.00	Power Beyond Plug
YLMB4SEAL	6.00 > 36.00	Seal kit MB4 - advise number of spools
YLMB43002	30.00	Motor spool
YLMB43003	30.00	Single acting spool on A port
YLMB43004	30.00	Single acting spool on B port
YLMB44061	49.00	Detent kit, no spring to centre (variations available)
YLMB44091	72.00	Detent kit, spring to centre (variations available)
YLMB44080	203.00	Pneumatic spool positioner
YLMB44080-SK	12.00	Pneuematic Actuator Seal Kit, MB3/MB4
YLMB440810	59.00	Hydraulic pilot kit - maximum pressure 50 bar (lever not included - see page 206)
YLMB44300-12V	438.00	Electro-pneumatic spool positioner, 12v DC
YLMB44300-24V	438.00	Electro-pneumatic spool positioner, 24v DC
YLMB44803	164.00	Microswitch kit, normally open, double acting (variations available)
YLMB44805	178.00	Microswitch kit, normally open, double acting for float spool (5PYL)
YLMB45000	48.00	Replacement lever box

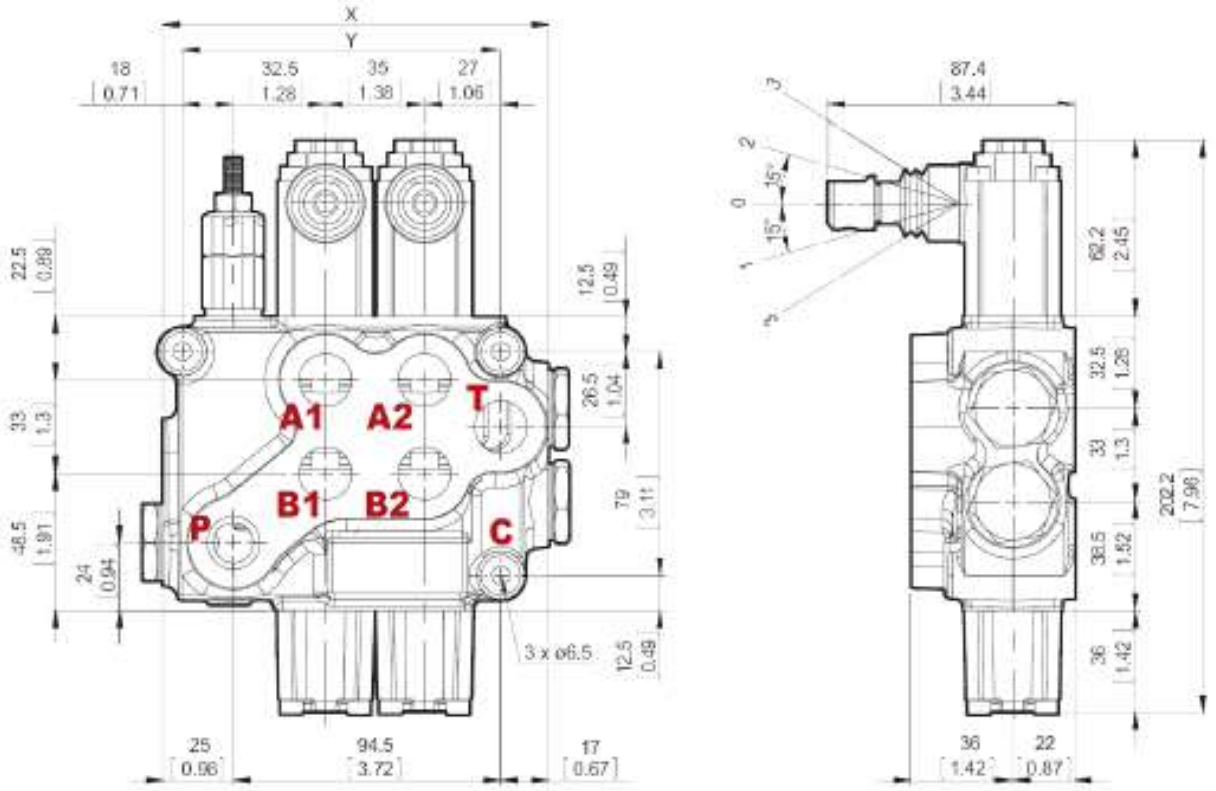

MB4 Dimensions

No. of Spools	X (mm)	Y (mm)	No. of Spools	X (mm)	Y (mm)
1	101.5	77.5	4	206.5	182.5
2	136.5	112.5	5	241.5	217.5
3	171.5	147.5	6	276.5	252.5

MB5 (80 LPM)

MB5 Monoblock						
Part #	List Price $	Spool	Quantity	Max Flow	Max Pressure	Ports
MB5/1S3/18L/G8-6-8	491.00	Cylinder	1	80 lpm	315 bar (25 bar on T)	1" BSPP (P,T) 3/4" BSPP (C,A,B)
MB5/1S3/28L/G8-6-8	491.00	Motor	1			
MB5/1S3/48L/G8-6-8	502.00	Single Acting	1			
MB5/2S3/18L/G8-6-8	721.00	Cylinder	2			
MB5/3S3/18L/G8-6-8	934.00	Cylinder	3			
MB5/4S3/18L/G8-6-8	1154.00	Cylinder	4			
MB5/5S3/18L/G8-6-8	1396.00	Cylinder	5			
MB5/6S3/18L/G8-6-8	1673.00	Cylinder	6			

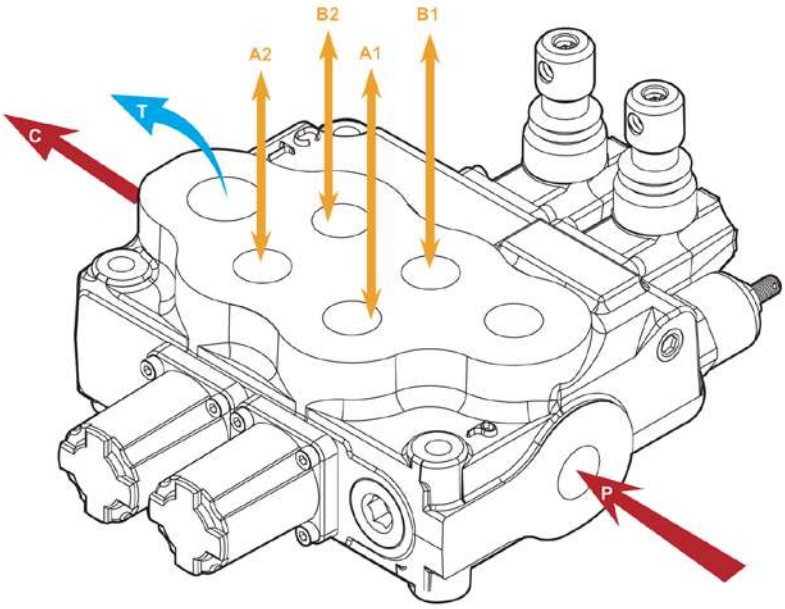

Relief valve standard 125-250 bar range

Power Beyond plug not included

MB5 Options

Part #	List Price $	Description
YLMB10200	31.00	Replacement lever M10 x 200mm
YLMB5SEAL	12.00 > 77.00	Seal kit MB5 - advise number of spools
YLMB53002	50.00	Motor spool
YLMB53003	50.00	Single acting spool on A port
YLMB53004	50.00	Single acting spool on B port
YLMB54061	87.00	Detent kit, no spring to centre (variations available)
YLMB54091	191.00	Detent kit, spring to centre (variations available)
YLMB54080	261.00	Pneumatic spool positioner
YLMB54080-SK	57.00	Pneuematic Actuator Seal Kit, MB5
YLMB540810	132.00	Hydraulic Pilot Kit - maximum pressure 50 bar (lever not included - see page 206)
YLMB54300-12V	511.00	Electro-pneumatic spool positioner, 12v DC
YLMB54300-24V	511.00	Electro-pneumatic spool positioner, 24v DC
YLMB5COPG4	31.00	Power beyond plug G1/2" female
YLMB5COPG6	31.00	Power beyond plug G3/4" female
YLMB54803	215.00	Microswitch kit, normally open, double acting (variations available)
YLMB55000	61.00	Replacement lever box
RCC5/1S/HL	263.00	Remote manual lever
YLMB52002	181.00	Relief valve 80-160 bar
YLMB52003	181.00	Relief valve 125-250 bar
YLMB52004	181.00	Relief valve 200-315 bar
YLX2100	340.00	Pilot operated 25-315 bar

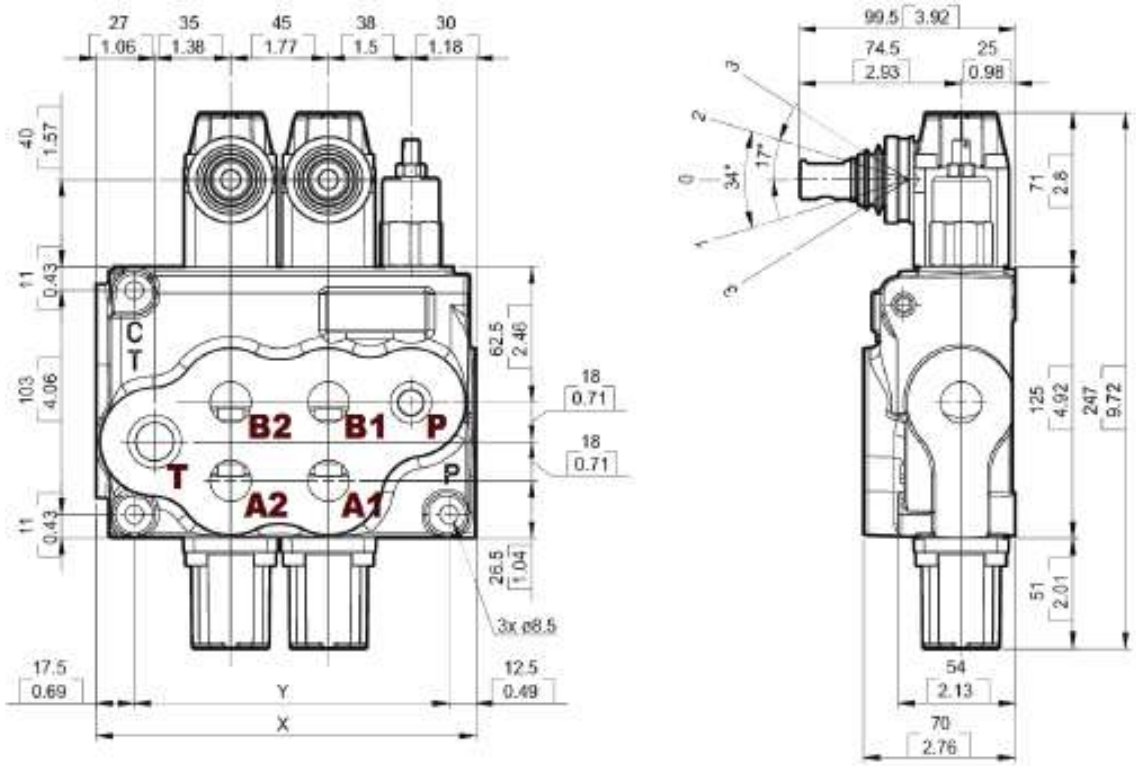

MB5 Dimensions

No. of Spools	X (mm)	Y (mm)	No. of Spools	X (mm)	Y (mm)
1	130	100	4	264.5	235
2	174.5	145	5	309.5	280
3	219.5	190	6	354.5	325

MB6 (120 LPM)

MB6 Monoblock						
Part #	List Price $	Spool	Quantity	Max Flow	Max Pressure	Ports
MB6/1S3/18L/G8-6-8	724.00	Cylinder	1	120 lpm	315 bar (25 bar on T)	1.1/4" BSPP (T,C) 1" BSPP (P,A,B)
MB6/1S3/28L/G8-6-8	724.00	Motor	1			
MB6/1S3/48L/G8-6-8	724.00	Single Acting	1			
MB6/2S3/18L/G8-6-8	1063.00	Cylinder	2			
MB6/3S3/18L/G8-6-8	1402.00	Cylinder	3			
MB6/4S3/18L/G8-6-8	1741.00	Cylinder	4			

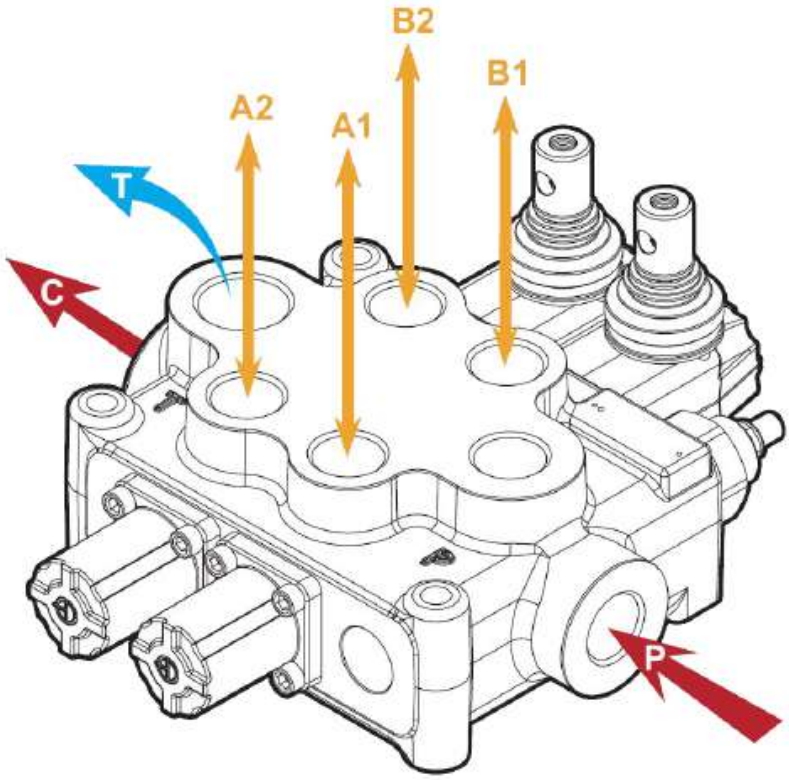

Relief valve standard 125-250 bar range

Power Beyond plug not included

MB6 Options

Part #	List Price $	Description
YLMB63002	80.00	Motor Spool
YLMB63003	80.00	Single Acting Spool on A Port
YLMB63004	80.00	Single Acting Spool on B Port
YLMB64061	83.00	Detent kit, no spring to centre (variations available)
YLMB64080	246.00	Pneumatic Spool Positioner
YLMB64080-SK	63.00	Pneuematic Actuator Seal Kit, MB6
YLMB64300-12V	541.00	Electro-Pneumatic Spool Positioner - 12v DC
YLMB64300-24V	541.00	Electro-Pneumatic Spool Positioner - 24v DC
2BMTX01954	59.00	Power Beyond Plug
YLPSN63000	369.00	Pilot Operated Relief Valve (25-315 bar)

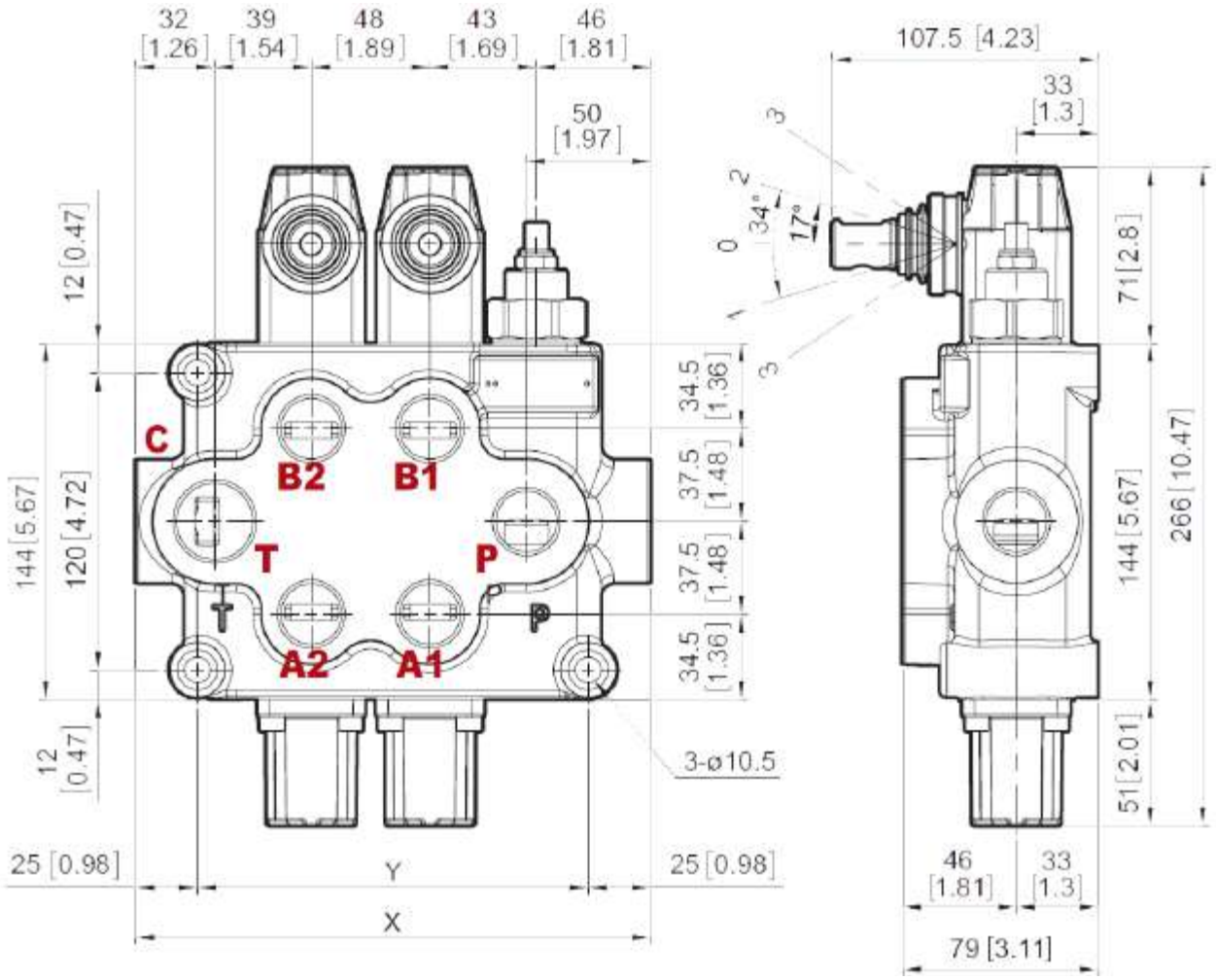

MB6 Dimensions

No. of Spools	X (mm)	Y (mm)	No. of Spools	X (mm)	Y (mm)
1	160	110	4	304	254
2	208	158	5	352	302
3	256	206	6	400	350

Cable Control

Part #	List Price $	Description
RCC-3/1S/HL	230.00	Remote lever for cable control MB2,3,4
RCC-5/1S/HL	263.00	Remote lever for cable control MB5
FCR-2	404.00	Joystick for cable control, dual axis
YLMB45003	59.00	Cable Connector, spool to joystick cable, MB2,3,4
YLMB55003	101.00	Cable Connector, spool to joystick cable, MB5
YLMBCABLE1M	187.00	Cable 1 Metre
YLMBCABLE1.5M	193.00	Cable 1.5 Metre
YLMBCABLE2M	204.00	Cable 2 Metre
YLMBCABLE2.5M	216.00	Cable 2.5 Metre
YLMBCABLE3M	227.00	Cable 3 Metre

Hydraulic Pilot Controllers

Part #	List Price $	Description	Axis	Flow	Inlet Pressure Range	A+B Outlet Pressure Range
JHP-1/1S-G2/8-A01B	417.00	Spring centre	Single	5-20 lpm	30-100 bar	5-19 bar
JHP-1/1S-G2/9-1-A01B	495.00	Spring centre friction detent	Single	5-20 lpm	30-100 bar	5-19 bar
JHP-1/1S-G2/FD-A01B	489.00	Friction detent	Single	5-20 lpm	30-100 bar	5-19 bar
JHP-1/1S-G2/LES-A01B	523.00	Safety lever detent in neutral	Single	5-20 lpm	30-100 bar	5-19 bar
JHP-2/01-G2/01-LCB-B02B	973.00	Spring centre	Dual	5-20 lpm	30-100 bar	6-25 bar

Note: all hydraulic pilot controllers are suitable for use with sectional, proportional and monoblock valves

Direct Mount Joystick

Part #	List Price $	Description
YLMB45002	221.00	Dual axis direct mount joystick, MB3/MB4
YLMB55002	212.00	Dual axis direct mount joystick, MB5

FCR

RCC

JHP

YLMB

Log Splitter Valve

Part #	List Price $	Max Flow	Max Pressure	P+T Ports	A+B Ports
LSV81303400	344.00	80 lpm	3265 psi	3/4" BSPP	1/2" BSPP
LSV81035340	411.00	120 lpm	3265 psi	3/4" BSPP	1/2" BSPP
LSV81303400-HK	80.00	Spare lever assembly 1/2" 80 lpm			
LSV81035340-HK	80.00	Spare lever assembly 1/2" 120 lpm			
LSV81303400-SK	40.00	Seal kit for valve LSV81303400			
LSV81035340-SK	40.00	Seal kit for valve LSV81035340			

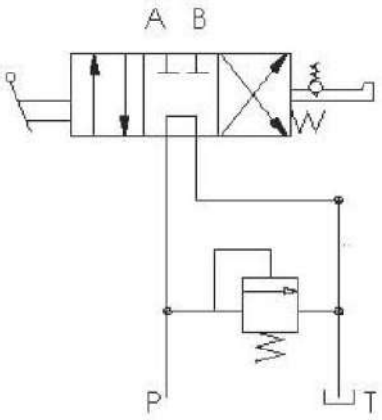

Relief valve preset to 2250psi

Kickout pressure preset 800psi (non-adjustable)

Maximum tank pressure 500psi

Recommended filtration 10micron

LSV81303400

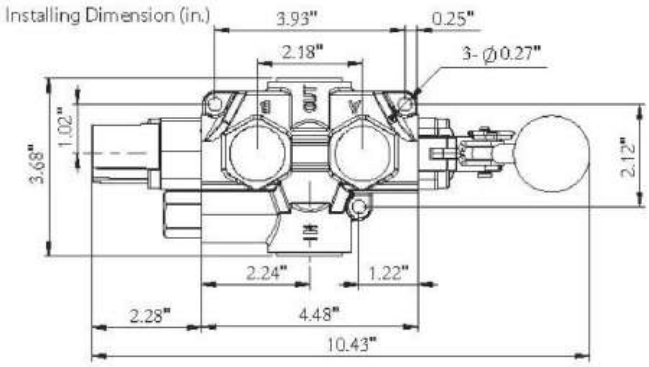

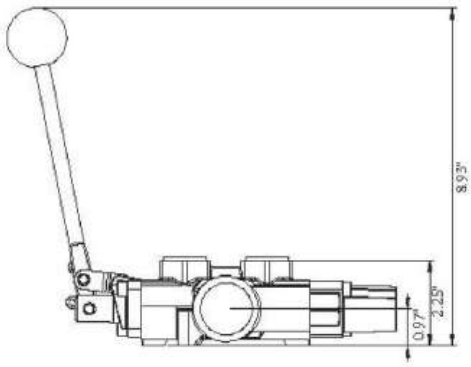
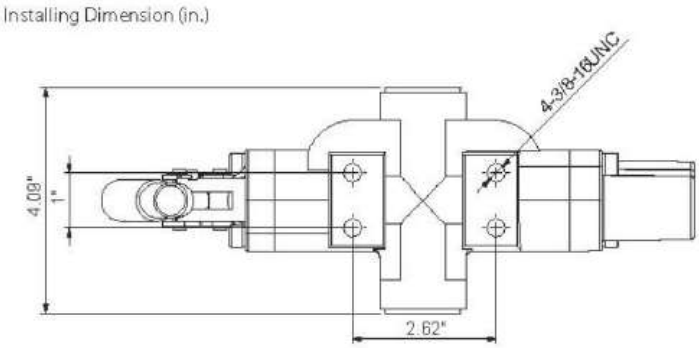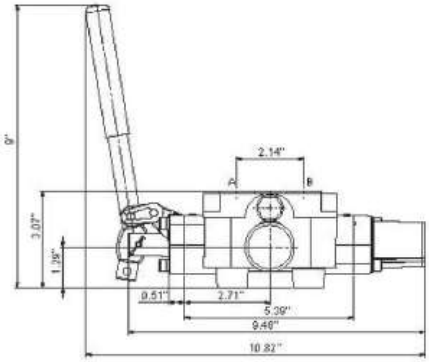
LSV81035340