CATFORD ENGINEERING PRODUCTS

Jamestown
SA 5491

All Prices Excluding GST

Phone: 0418 641 566

www.catford.com.au sales@catford.com.au

Sectional Valves

*SN3, SN4, SN6 & SN8

Sectional Valves

*Remote Contol Accessories

Lot 25, Mannanarie Road, Jamestown, South Australia 5491

PO Box 178, Jamestown, South Australia 5491

0418 641 566

sales@catford.com.au

Due to fluctuations in the Australian dollar and the economic climate, please be advised that all prices are subject to change.
Please contact us to confirm pricing.

All prices stated within are exclusive of GST
(All prices are correct as of January 1st 2022, but Catford Engineering reserve the right to change these prices without notice)

Sectional Valves

CATFORD ENGINEERING PRODUCTS

Jamestown
SA 5491

Phone: 0418 641 566
www.catford.com.au sales@catford.com.au

SN3 Sectional Valves 208
SN3 Options 209
SN4 Sectional Valves 210
SN4 Options 211
SN6 Sectional Valves 212
SN6 Options 213
SN8 Sectional Valves 214
SN8 Options 215
Remote Control Accessories 216

SN3 Sectional Valve

Part #	List Price $	Quantity	Spool	Max Flow	Max Pressure	Ports
SN3/1S3/18L/P3T/G3-4	675.00	1	Cylinder (standard)	50 lpm	315 bar (25 bar on T)	1/2" BSPP (T,C) 3/8" BSPP (P,A,B)
SN3/2S3/18L/P3T/G3-4	975.00	2				
SN3/3S3/18L/P3T/G3-4	1276.00	3				
SN3/4S3/18L/P3T/G3-4	1573.00	4				
SN3/5S3/18L/P3T/G3-4	1876.00	5				
SN3/6S3/18L/P3T/G3-4	2177.00	6				
SN3/7S3/18L/P3T/G3-4	2477.00	7				
SN3/8S3/18L/P3T/G3-4	2772.00	8				
SN3/9S3/18L/P3T/G3-4	3072.00	9				
SN3/10S3/18L/P3T/G3-4	3372.00	10				
SN3/11S3/18L/P3T/G3-4	3672.00	11				
SN3/12S3/18L/P3T/G3-4	3967.00	12				

SN3 Seal Kits

Part #	List Price $	Description
FPSN-3-SK	12.00	Inlet relief seal
EWSN-3-SK	55.00	Working section seal kit
FTSN-3-SK	12.00	Outlet section seal kit

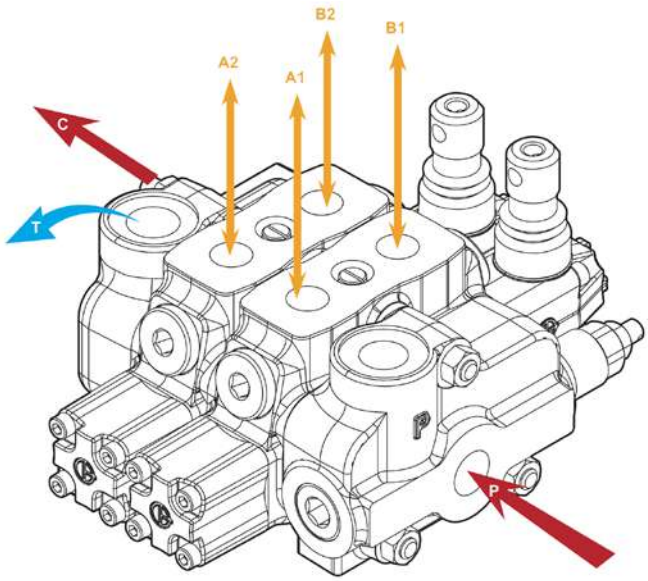

Relief valve standard
63-200 bar range
Standard setting 120 bar

Port cavities in all sections

Series sections available
Max 210 bar

SN3 Options

Part #	List Price $	Description
YLPSN33000	328.00	Pilot operated relief 25-315 bar
YLPSN33004	135.00	Relief valve 160-315 bar
YLWSN08160	15.00	Replacement lever M8 x 160mm
YLWSN32002	86.00	Motor spool (No.2)
YLWSN32003	96.00	Single acting spool on A port
YLWSN32004	96.00	Single acting spool on B port
YLWSN33061	61.00	Detent kit, no spring to centre (variations available)
YLWSN33091	71.00	Detent kit, spring to centre (variations available)
YLWSN33080	257.00	Pneumatic spool positioner
YLWSN33080-SK	66.00	Pneuematic Actuator Seal Kit,SN3
YLWSN330810	64.00	Hydraulic pilot kit - maximum pressure 50 bar (lever not included, see page 216)
YLWSN34002	214.00	Joystick for 2 spool operation
YLWSN34300-12V	506.00	Electro-pneumatic spool positioner, 12v DC
YLWSN34300-24V	506.00	Electro-pneumatic spool positioner, 24v DC
YLWSN34803	211.00	Microswitch kit, normally open (variations available)
YLWSN35002	114.00	Anti shock valve 63-125 bar
YLWSN35003	114.00	Anti shock valve 100-250 bar
YLWSN35004	114.00	Anti shock valve 200-315 bar
YLWSN35012	125.00	Anti shock & anti cavitation valve 63-125 bar
YLWSN35013	125.00	Anti shock & anti cavitation valve 100-250 bar
YLWSN35014	125.00	Anti shock & anti cavitation valve 200-315 bar

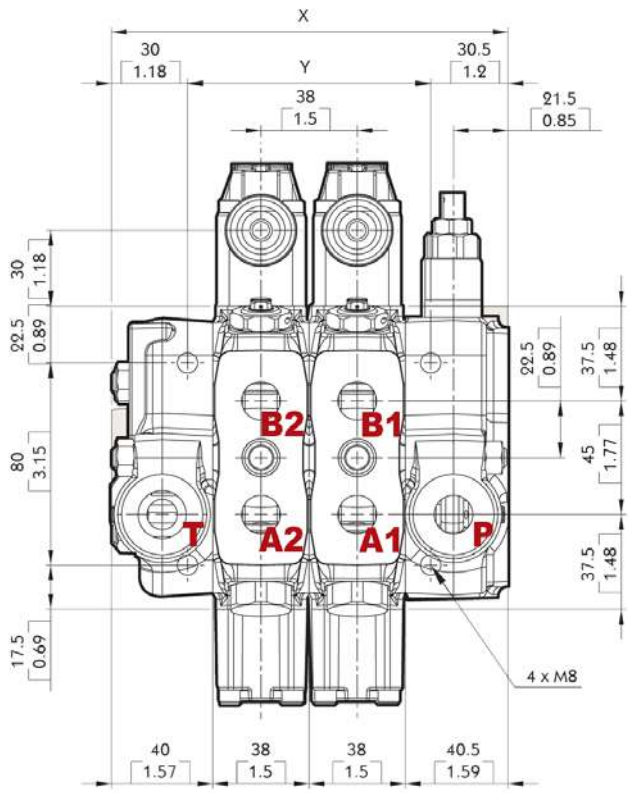

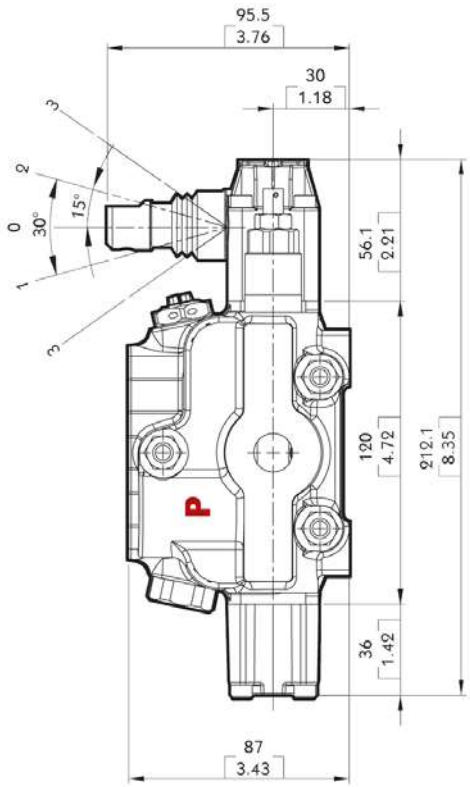

SN4 (80 LPM)

SN4 Sectional Valve

Part #	List Price $	Quantity	Spool	Max Flow	Max Pressure	Ports
SN4/1S3/18L/P3T/G4-6	896.00	1	Cylinder (standard)	80 lpm	315 bar (25 bar on T)	3/4" BSPP (T,C) 1/2" BSPP (P,A,B)
SN4/2S3/18L/P3T/G4-6	975.00	2				
SN4/3S3/18L/P3T/G4-6	1276.00	3				
SN4/4S3/18L/P3T/G4-6	2106.00	4				
SN4/5S3/18L/P3T/G4-6	2509.00	5				
SN4/6S3/18L/P3T/G4-6	2912.00	6				
SN4/7S3/18L/P3T/G4-6	3311.00	7				
SN4/8S3/18L/P3T/G4-6	3714.00	8				
SN4/9S3/18L/P3T/G4-6	4116.00	9				
SN4/10S3/18L/P3T/G4-6	4519.00	10				
SN4/11S3/18L/P3T/G4-6	4922.00	11				
SN4/12S3/18L/P3T/G4-6	5325.00	12				

SN4 Seal Kits

Part #	List Price $	Description
FPSN-4-SK	12.00	Inlet relief seal
EWSN-4-SK	55.00	Working section seal kit
FTSN-4-SK	12.00	Outlet section seal kit

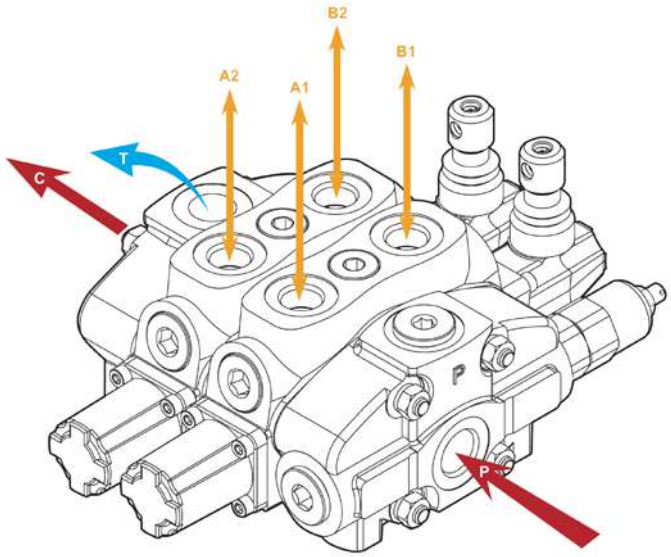

Relief valve standard
125-250 bar range
Standard setting 120 bar

SN4 Options

Part #	List Price $	Description
YLPSN43003	182.00	Relief valve 125-250 bar
YLPSN43004	182.00	Relief valve 200-315 bar
YLPSN45024P	430.00	Solenoid Dump Valve - Manual Override - 24v DC
YLX2100	340.00	Pilot operated relief valve 25-315 bar
YLWSN10200	30.00	Replacement Lever M10 x 200mm
YLWSN42002	171.00	Motor spool (No.2)
YLWSN42003	182.00	Single acting spool on A port
YLWSN43061	92.00	Detent kit, no spring to centre (variations available)
YLWSN43091	185.00	Detent kit, spring to centre (variations available)
YLWSN43080	262.00	Pneumatic spool positioner
YLWSN43080-SK	58.00	Pneuematic Actuator Seal Kit, SN4
YLWSN43803	220.00	Microswitch kit, normally open (variations available)
YLWSN44002	225.00	Joystick for 2 spool operation
YLWSN44300-12V	489.00	Electro-pneumatic spool positioner, 12v DC
YLWSN44300-24V	489.00	Electro-pneumatic spool positioner, 24v DC
YLWSN45002	140.00	Anti shock valve 63-125 bar
YLWSN45003	140.00	Anti shock valve 100-250 bar
YLWSN45004	140.00	Anti shock valve 200-315 bar
YLWSN45012	154.00	Anti shock & anti cavitation valve 63-125 bar
YLWSN45013	154.00	Anti shock & anti cavitation valve 100-250 bar
YLWSN45014	154.00	Anti shock & anti cavitation valve 200-315 bar
YLWSN45100	144.00	Anti cavitation valve
YLWSN430810	135.00	Hydraulic pilot kit - maximum pressure 50 bar (lever not included, see page 216)
EWSN-4/1KOL-G4/M3	757.00	Pressure kickout (log valve)

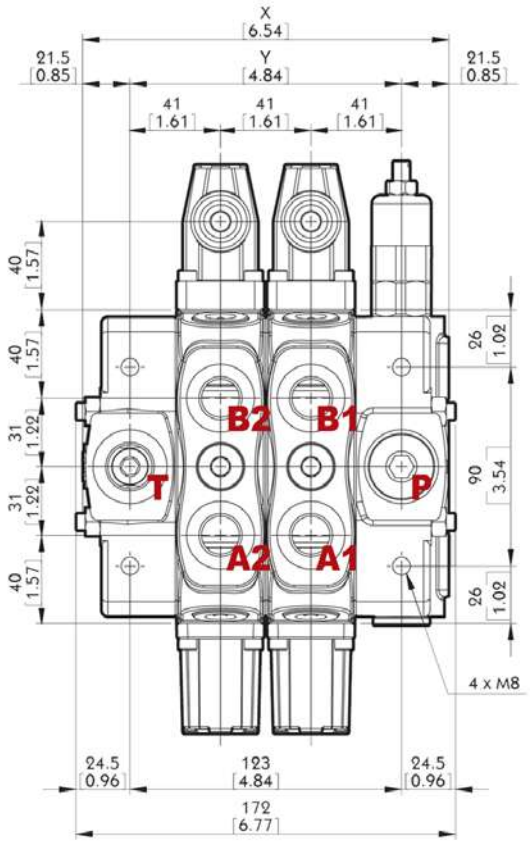

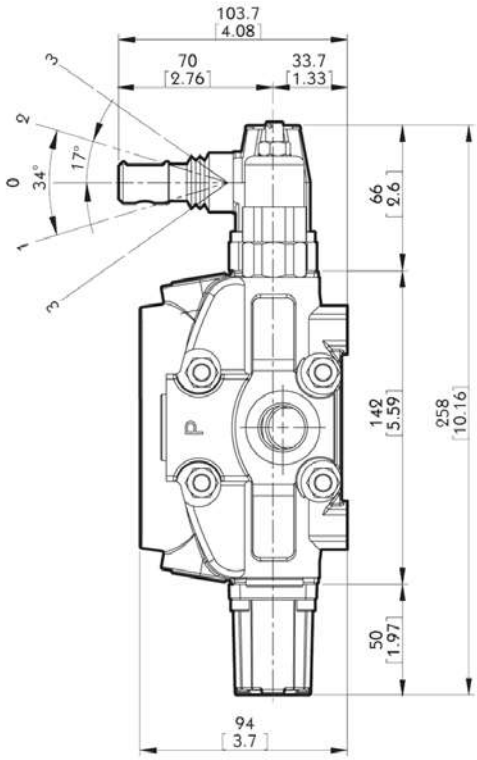

SN6 (140 LPM)

SN6 Sectional Valve

Part #	List Price $	Quantity	Spool	Max Flow	Max Pressure	Ports
SN6/1S3/18L/P3T/G6-1	1288.00	1	Cylinder (standard)	140 lpm	315 bar (25 bar on T)	1" BSPP (T) 3/4" BSPP (P,A,B,C)
SN6/2S3/18L/P3T/G6-1	1939.00	2				
SN6/3S3/18L/P3T/G6-1	2592.00	3				
SN6/4S3/18L/P3T/G6-1	3245.00	4				
SN6/5S3/18L/P3T/G6-1	3900.00	5				
SN6/6S3/18L/P3T/G6-1	4552.00	6				
SN6/7S3/18L/P3T/G6-1	5205.00	7				
SN6/8S3/18L/P3T/G6-1	5859.00	8				
SN6/9S3/18L/P3T/G6-1	6512.00	9				
SN6/10S3/18L/P3T/G6-1	7165.00	10				
SN6/11S3/18L/P3T/G6-1	7818.00	11				
SN6/12S3/18L/P3T/G6-1	8472.00	12				

SN6 Seal Kits

Part #	List Price $	Description
FPSN-6-SK	14.00	Inlet relief seal
EWSN-6-SK	60.00	Working section seal kit
FTSN-6-SK	14.00	Outlet section seal kit

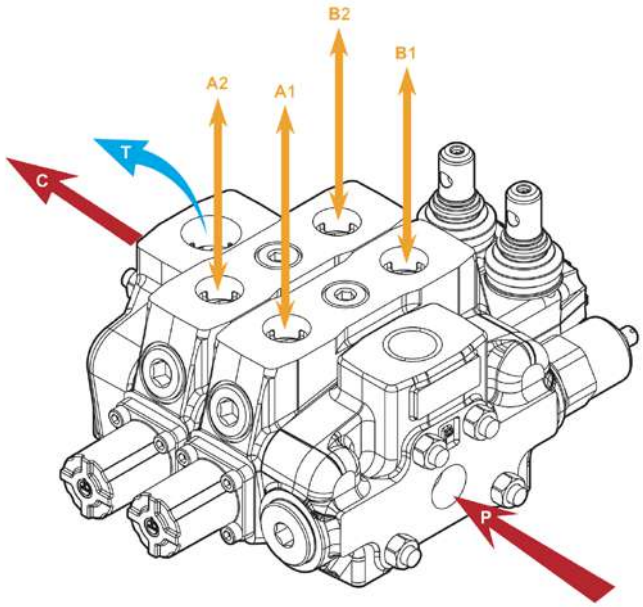

Relief valve standard
25-315 bar range
Standard setting 125 bar

Port cavities in all sections

SN6 Options

Part #	List Price $	Description
YLPSN63000	369.00	Relief valve 25-315 bar
YLPSN63003	227.00	Relief Valve 125-250 bar
YLWSN10200	30.00	Replacement Lever M10 x 200mm
YLWSN62002	156.00	Motor spool (No.2)
YLWSN62003	166.00	Single acting spool on A port
YLWSN63061	125.00	Detent kit, no spring to centre (variations available)
YLWSN63091	235.00	Detent kit, spring to centre (variations available)
YLWSN63080	258.00	Pneumatic spool positioner
YLWSN63080-SK	60.00	Pneuematic Actuator Seal Kit,SN6
YLWSN63803	220.00	Microswitch kit, normally open (variations available)
YLWSN630810	135.00	Hydraulic pilot kit - maximum pressure 50 bar (lever not included, see page 216)
YLSWN64002	228.00	Joystick for 2 spool operation
YLWSN64300-12V	505.00	Electro-pneumatic spool positioner, 12v DC
YLWSN64300-24V	505.00	Electro-pneumatic spool positioner, 24v DC
YLWSN65002	220.00	Anti shock valve 63-125 bar
YLWSN65003	220.00	Anti shock valve 100-250 bar
YLWSN65004	220.00	Anti shock valve 200-315 bar
YLWSN65012	275.00	Anti shock & anti cavitation valve 63-125 bar
YLWSN65013	275.00	Anti shock & anti cavitation valve 100-250 bar
YLWSN65014	275.00	Anti shock & anti cavitation valve 200-315 bar

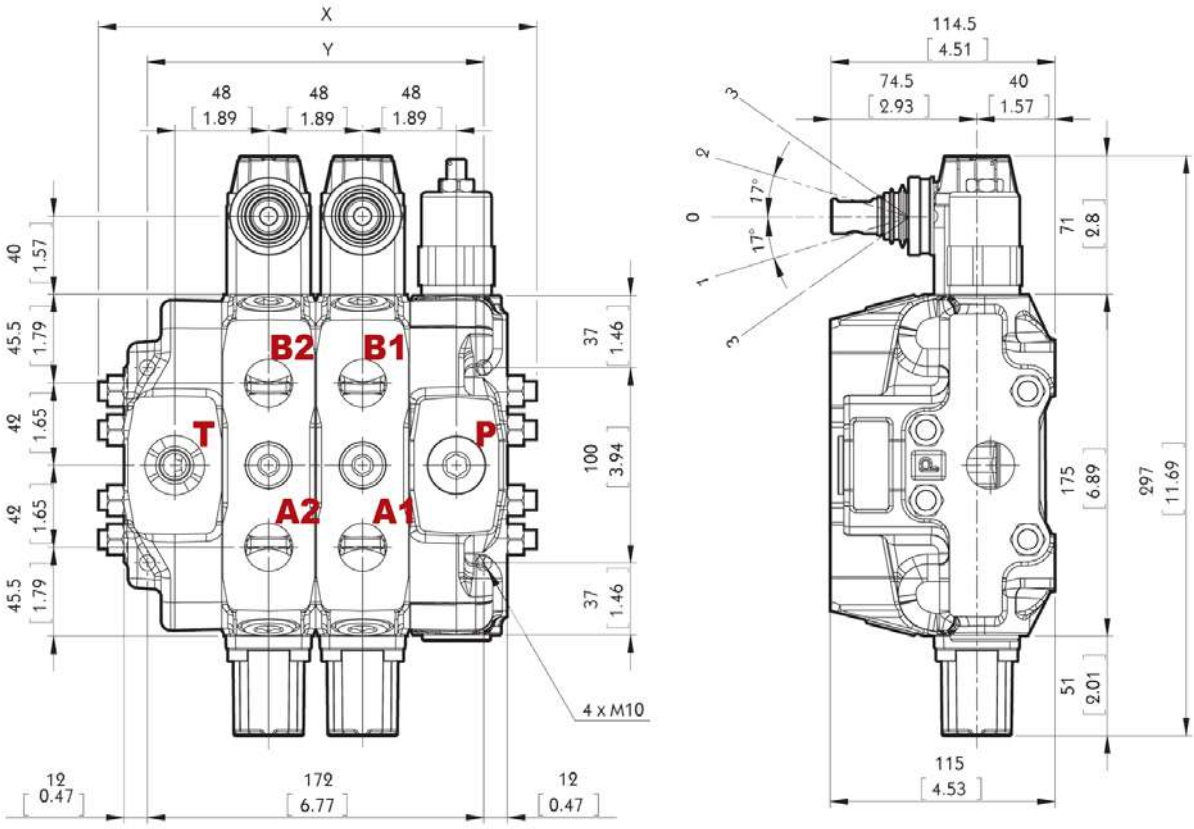

SN8 (220 LPM)

SN8 Sectional Valve

Part #	List Price $	Quantity	Spool	Max Flow	Max Pressure	Ports
SN8/1S3/18L/P3T/G8-8-10	2288.00	1	Cylinder (standard)	220 lpm	315 bar (25 bar on T)	1.1/4" BSPP (T) 1" BSPP (P,A,B,C)
SN8/2S3/18L/P3T/G8-8-10	3325.00	2				
SN8/3S3/18L/P3T/G8-8-10	4359.00	3				
SN8/4S3/18L/P3T/G8-8-10	5399.00	4				
SN8/5S3/18L/P3T/G8-8-10	6434.00	5				
SN8/6S3/18L/P3T/G8-8-10	7472.00	6				
SN8/7S3/18L/P3T/G8-8-10	8503.00	7				
SN8/8S3/18L/P3T/G8-8-10	9543.00	8				
SN8/9S3/18L/P3T/G8-8-10	10581.00	9				
SN8/10S3/18L/P3T/G8-8-10	11617.00	10				
SN8/11S3/18L/P3T/G8-8-10	12654.00	11				
SN8/12S3/18L/P3T/G8-8-10	13689.00	12				

SN8 Seal Kits

Part #	List Price $	Description
FPSN-8-SK	20.00	Inlet relief seal
EWSN-8-SK	77.00	Working section seal kit
FTSN-8-SK	22.00	Outlet section seal kit

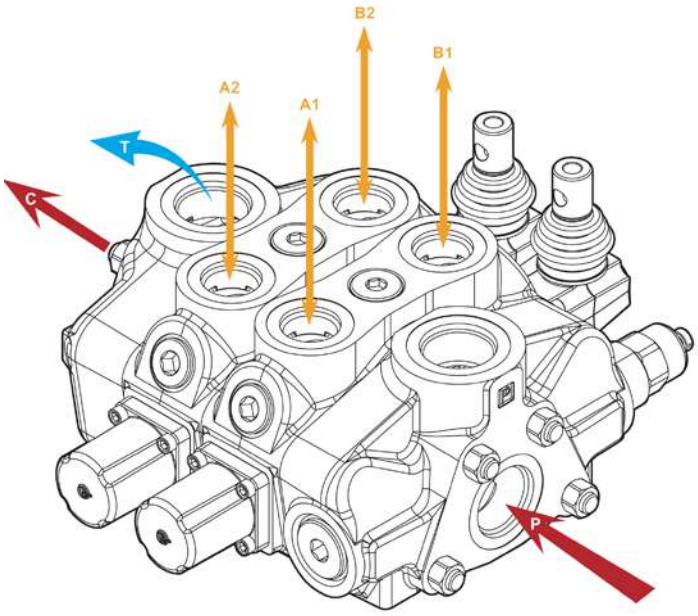

Relief valve standard
25-315 bar range
Standard setting 125 bar

Port cavities in all sections

SN8 Options

Part #	List Price $	Description
YLPSN83000	543.00	Relief valve 25-315 bar
YLWSN12200	34.00	Replacement lever M12 x 200mm
YLWSN82002	279.00	Motor spool (No.2)
YLWSN82003	314.00	Single acting spool on A port
YLWSN83061	139.00	Detent kit, no spring to centre (variations available)
YLWSN83091	296.00	Detent kit, spring to centre (variations available)
YLWSN83080	349.00	Pneumatic spool positioner
YLWSN83080-SK	110.00	Pneuematic Actuator Seal Kit,SN8
YLWSN830810	523.00	Hydraulic pilot kit - maximum pressure 50 bar (lever not included, see page 216)
YLWSN830811	523.00	Hydraulic pilot kit - SN8 - 28IMM, motor spool (lever not included, see page 216)
YLWSN84300-12V	589.00	Electro-pneumatic spool positioner, 12v DC
YLWSN84300-24V	589.00	Electro-pneumatic spool positioner, 24v DC
YLWSN84803	296.00	Microswitch kit, normally open (variations available)
YLWSN65002	220.00	Anti shock valve 63-125 bar
YLWSN65003	220.00	Anti shock valve 100-250 bar
YLWSN65004	220.00	Anti shock valve 200-315 bar
YLWSN85012	341.00	Anti shock & anti cavitation valve 63-125 bar
YLWSN85013	341.00	Anti shock & anti cavitation valve 100-250 bar
YLWSN85014	341.00	Anti shock & anti cavitation valve 200-315 bar

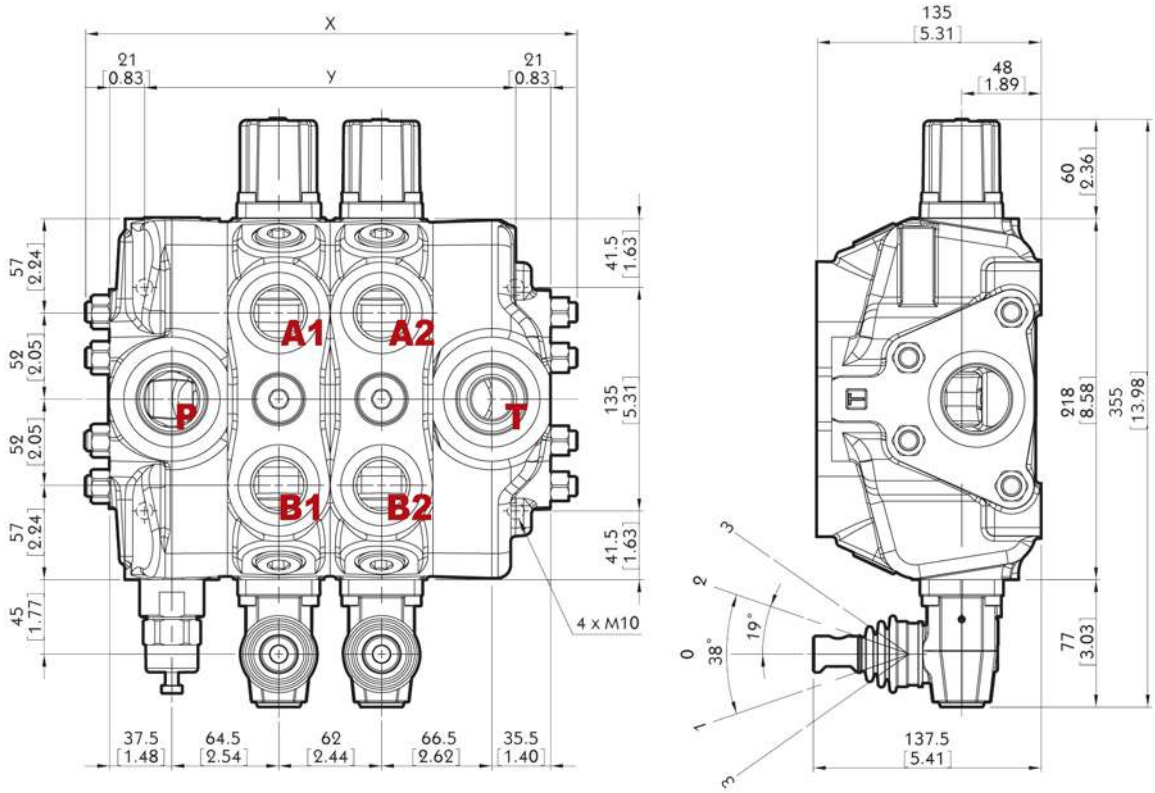

Cable Control

Part #	List Price $	Description
RCC-3/1S/HL	230.00	Remote lever for cable control SN3
RCC-5/1S/HL	263.00	Remote lever for cable control SN4,6,8
FCR-2	404.00	Joystick for cable control, dual axis
YLWSN45003	140.00	Cable connector, spool to joystick cable SN3
YLWSN44003	95.00	Cable connector, spool to joystick cable SN4
YLWSN64003	136.00	Cable connector, spool to joystick cable SN6
YLWSN84003	209.00	Cable connector, spool to joystick cable SN8
YLMBCABLE1M	187.00	Cable 1 Metre
YLMBCABLE1.5M	193.00	Cable 1.5 Metre
YLMBCABLE2M	204.00	Cable 2 Metre
YLMBCABLE2.5M	216.00	Cable 2.5 Metre
YLMBCABLE3M	227.00	Cable 3 Metre

Hydraulic Pilot Controllers

Part #	List Price $	Description	Axis	Flow	Inlet Pressure Range	A+B Outlet Pressure Range
JHP-1/1S-G2/8-A01B	417.00	Spring centre	Single	5-20 lpm	30-100 bar	5-19 bar
JHP-1/1S-G2/9-1-A01B	495.00	Spring centre friction detent	Single	5-20 lpm	30-100 bar	5-19 bar
JHP-1/1S-G2/FD-A01B	489.00	Friction detent	Single	5-20 lpm	30-100 bar	5-19 bar
JHP-1/1S-G2/LES-A01B	523.00	Safety lever detent in neutral	Single	5-20 lpm	30-100 bar	5-19 bar
JHP-2/01-G2/01-LCB-B02B	973.00	Spring centre	Dual	5-20 lpm	30-100 bar	6-25 bar

Note: all hydraulic pilot controllers are suitable for use with sectional, proportional and monoblock valves

FCR

RCC

JHP