CATFORD ENGINEERING PRODUCTS

Jamestown
SA 5491

All Prices Excluding GST

Phone: 0418 641 566

www.catford.com.au sales@catford.com.au

Tank & Tank Accessories

*Steel Tanks *Lids & Gaskets
*Push In & Threaded Filler Breathers
*Sight Gauges & Diffusers *Level Gauges
*Suction Strainers

Lot 25, Mannanarie Road, Jamestown, South Australia 5491

PO Box 178, Jamestown, South Australia 5491

0418 641 566

sales@catford.com.au

Due to fluctuations in the Australian dollar and the economic climate, please be advised that all prices are subject to change.
Please contact us to confirm pricing.

All prices stated within are exclusive of GST
(All prices are correct as of January 1st 2022, but Catford Engineering reserve the right to change these prices without notice)

Tanks & Tank Accessories

CATFORD ENGINEERING PRODUCTS

Jamestown
SA 5491

Phone: 0418 641 566

www.catford.com.au sales@catford.com.au

Industrial Steel Tanks 234

Tank Lid Gaskets 234

Tank Lids 234

Magnetic Drain Plugs & Filter Rods 238

Filler & Threaded Breathers 239

Filler & Threaded Breathers 240

Suction Strainers 241

Diffusers 241

Venting Plugs 242

Sight Gauges 242

Level Gauges 243

Level Gauges 245

Electrical Level Gauges 246

PREMIUM ITALIAN PRODUCT

AUSTRALIAN MADE PRODUCT

Industrial Steel Tanks

Part #	List Price $		Useable Litres	Volume	Tank Size mm			Total Unit Height mm
	Uncoated	Coated			L	W	H	
SE10LT (aluminium)	250.00	n/a	10 L	12 L	310	240	207	225
IT-25	851.00	975.00	25 L	28 L	360	360	220	225
IT-40	1075.00	1125.00	40 L	60 L	500	350	350	450
IT-70	1270.00	1342.00	70 L	100 L	600	425	400	500
IT-120	1689.00	1893.00	120 L	165 L	700	500	475	575
IT-200	1895.00	2198.00	200 L	260 L	800	600	550	650
IT-300	2163.00	2541.00	300 L	380 L	900	700	600	700
IT-400	2569.00	2974.00	400 L	500 L	900	700	800	900

Note: for COATED option, add "C" to end of part number, e.g. IT-25C

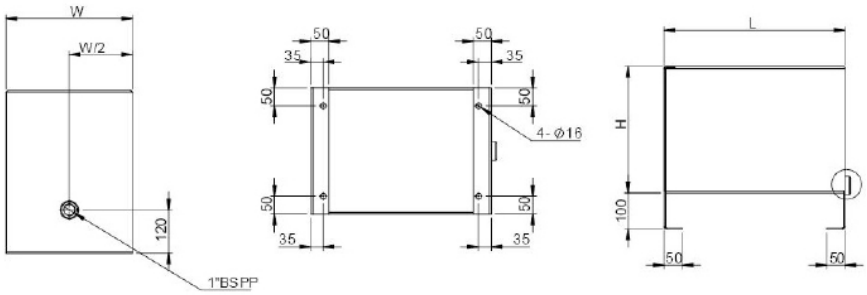

Tank Lid Gaskets

Part #	List Price $	Material Litres	Size
GUS10	20.00	Paper	To suit 10 L tank
ITG-25C	63.00	Cork	To suit 25 L tank
ITG-40C	74.00	Cork	To suit 40 L tank
ITG-70C	108.00	Cork	To suit 70 L tank
ITG-120C	124.00	Cork	To suit 120 L tank
ITG-200C	216.00	Cork	To suit 200 L tank
ITG-300C	255.00	Cork	To suit 300/400 L tank

Tank Lid - Uncoated and Uncut

Part #	List Price $	Description
ITL10	160.00	Lid for 10 L tanks - uncoated and lid bolt holes only
ITL25	195.00	Lid for 25 L tanks - uncoated and lid bolt holes only
ITL40	228.00	Lid for 40 L tanks - uncoated and lid bolt holes only
ITL70	272.00	Lid for 70 L tanks - uncoated and lid bolt holes only
ITL120	376.00	Lid for 120 L tanks - uncoated and lid bolt holes only
ITL200	420.00	Lid for 200 L tanks - uncoated and lid bolt holes only
ITL300	580.00	Lid for 300/400 L tanks - uncoated and lid bolt holes only

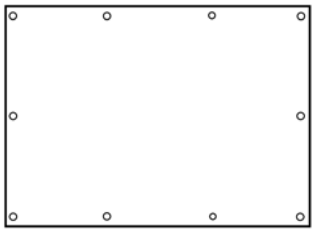

Suction Butterfly Valves - see page 236

Tank Lids - Coated & Cut

Part #	List Price $	Tank Size	Motor Size	Breather	Filter	Manifold
ITL10-90-M3	160.00	10 L	D80-90	FB3	n/a	2-6 Cetop3 valves
ITL10-90-M3-S3	160.00	10 L	D80-90	FB3	n/a	P+T or single Cetop3 valve
ITL10-RFB	160.00	10 L	n/a	FB3	TIFP04	n/a
ITL25-71-M3	195.00	25 L	D71	FB3	FIF-04	2-6 Cetop3 valves
ITL25-71-S3	195.00	25 L	D71	FB3	FIF-04	P+T or single Cetop3 valve
ITL25-90-M3	195.00	25 L	D80-90	FB3	FIF-04	2-6 Cetop3 valves
ITL25-90-S3	195.00	25 L	D80-90	FB3	FIF-04	P+T or single Cetop3 valve
ITL25-100-M3	195.00	25 L	D100-112	FB3	FIF-04	2-6 Cetop3 valves
ITL25-100-S3	195.00	25 L	D100-112	FB3	FIF-04	P+T or single Cetop3 valve
ITL25-RFB	195.00	25 L	n/a	FB6	FIF-04	n/a
ITL40-71-M3	228.00	40 L	D71	FB3	FIF-04	2-6 Cetop3 valves
ITL40-71-S3	228.00	40 L	D71	FB3	FIF-04	P+T or single Cetop3 valve
ITL40-90-M3	228.00	40 L	D80-90	FB3	FIF-04	2-6 Cetop3 valves
ITL40-90-S3	228.00	40 L	D80-90	FB3	FIF-04	P+T or single Cetop3 valve
ITL40-100-M3	228.00	40 L	D100-112	FB3	FIF-04	2-6 Cetop3 valves
ITL40-100-S3	228.00	40 L	D100-112	FB3	FIF-04	P+T or single Cetop3 valve
ITL40-RFB	228.00	40 L	n/a	FB6	TIFP06	n/a
ITL70-90-M3	272.00	70 L	D80-90	FB6	FIF-06/08	2-6 Cetop3 valves
ITL70-90-S3	272.00	70 L	D80-90	FB6	FIF-06/08	P+T or single Cetop3 valve
ITL70-100-M3	272.00	70 L	D100-112	FB6	FIF-06/08	2-6 Cetop3 valves
ITL70-100-S3	272.00	70 L	D100-112	FB6	FIF-06/08	P+T or single Cetop3 valve
ITL70-132-M3	272.00	70 L	D132	FB6	FIF-06/08	2-6 Cetop3 valves
ITL70-132-S3	272.00	70 L	D132	FB6	FIF-06/08	P+T or single Cetop3 valve
ITL70-RFB	272.00	70 L	n/a	FB6	TIFP06	n/a
ITL120-100-M3	376.00	120 L	D100-112	FB6	FIF-06/08	2-6 Cetop3 valves
ITL120-100-S3	376.00	120 L	D100-112	FB6	FIF-06/08	P+T or single Cetop3 valve
ITL120-132-M3	376.00	120 L	D132	FB6	FIF-06/08	2-6 Cetop3 valves
ITL120-132-S3	376.00	120 L	D132	FB6	FIF-06/08	P+T or single Cetop3 valve
ITL120-160-M5	376.00	120 L	D160-180	FB6	FIF-10	2-6 Cetop3 valves
ITL120-160-S5	376.00	120 L	D160-180	FB6	FIF-10	P+T or single Cetop3 valve
ITL120-RFB	376.00	120 L	n/a	FB6	TIFP10	n/a
ITL200-132-M5	420.00	200 L	D132	FB6	FIF-10	2-6 Cetop5 valves
ITL200-132-S5	420.00	200 L	D132	FB6	FIF-10	P+T or single Cetop5 valve
ITL200-160-M5	420.00	200 L	D160-180	FB6	FIF-10	2-6 Cetop5 valves
ITL200-160-S5	420.00	200 L	D160-180	FB6	FIF-10	P+T or single Cetop5 valve
ITL200-RFB	420.00	200 L	n/a	FB6	TIFP10	n/a
ITL300-160-M5	580.00	300-400 L	D160-180	FB6	FIF-10	2-6 Cetop5 valves
ITL300-160-S5	580.00	300-400 L	D160-180	FB6	FIF-10	P+T or single Cetop5 valve
ITL300-RFB	580.00	300-400 L	n/a	FB6	TIFP10	n/a
ITL300-200-M5	600.00	300-400 L	D200	FB6	TIFP10	2-6 Cetop5 valves
ILT300-200-S5	600.00	300-400 L	D200	FB6	TIFP10	P+T or single Cetop5 valve
ITL300-225-M5	600.00	300-400 L	D225	FB6	TIFP10	2-6 Cetop5 valves
ITL300-225-S5	600.00	300-400 L	D225	FB6	TIFP10	P+T or single Cetop5 valve
ITL300-250-M5	600.00	300-400 L	D250	FB6	TIFP10	2-6 Cetop5 valves
ITL300-250-S5	600.00	300-400 L	D250	FB6	TIFP10	P+T or single Cetop5 valve

Suction Butterfly Valves

Part #	List Price $	Size	Max Working Pressure	Differential Pressure
SDA0040	459.00	DIN40 SAE 1.1/2"	7 bar	6 bar
SDA0050	511.00	DIN50 SAE 2"	7 bar	6 bar
SDA0063	537.00	DIN65 SAE 2.1/2"	7 bar	6 bar
SDA0080	598.00	DIN80 SAE 3"	7 bar	6 bar
SDA0100	719.00	DIN100 SAE 4"	7 bar	6 bar
SDA0125	841.00	DIN125 SAE 5"	7 bar	6 bar

SDA Series (front)

SDA Series (back)

SDAET Series

Adaptor Flange

Part #	List Price $	Description	Material
SDAET040K	199.00	Adaptor NG40	ST37 Steel
SDAET063K	217.00	Adaptor NG50 & 63	ST37 Steel
SDAET080K	234.00	Adaptor NG80	ST37 Steel
SDAET100K	312.00	Adaptor NG100	ST37 Steel
SDAET125K	373.00	Adaptor NG125	ST37 Steel

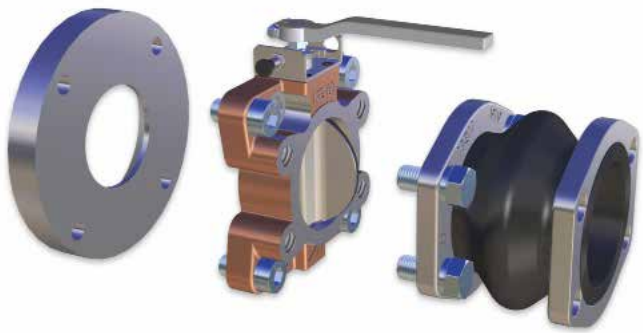

Compensators - SAE

Part #	List Price $	Size	Material	Max Working Pressure
SDKSS025	377.00	NG25 SAE 1"	NBR/CR Steel	1.5 bar (absolute)
SDKSS032	392.00	NG32 SAE 1.1/4"	NBR/CR Steel	1.5 bar (absolute)
SDKSS040	392.00	NG40 SAE 1.1/2"	NBR/CR Steel	1.5 bar (absolute)
SDKSS050	447.00	NG50 SAE 2"	NBR/CR Steel	1.5 bar (absolute)
SDKSS063	473.00	NG63 SAE 2.1/2"	NBR/CR Steel	1.5 bar (absolute)
SDKSS080	521.00	NG80 SAE 3"	NBR/CR Steel	1.5 bar (absolute)
SDKSS092	584.00	NG90 SAE 3.1/2"	NBR/CR Steel	1.5 bar (absolute)
SDKSS100	706.00	NG100 SAE 4"	NBR/CR Steel	1.5 bar (absolute)
SDKSS126	939.00	NG125 SAE 5"	NBR/CR Steel	1.5 bar (absolute)

SAE Series

DIN Series

Compensators - DIN

Part #	List Price $	Size	Material	Nominal Pressure
SDKHDD6D60032N00	485.00	NG32	NBR/CR Steel	Up to 16 bar
SDKHDD6D60040N00	514.00	NG40	NBR/CR Steel	Up to 16 bar
SDKHDD6D60050N00	535.00	NG50	NBR/CR Steel	Up to 16 bar
SDKHDD6D60065N00	613.00	NG65	NBR/CR Steel	Up to 16 bar
SDKHDD6D60080N00	748.00	NG80	NBR/CR Steel	Up to 16 bar
SDKHDD6D60100N00	926.00	NG100	NBR/CR Steel	Up to 16 bar
SDKHDD6D60125N00	1141.00	NG125	NBR/CR Steel	Up to 16 bar
SDKHDD6D60200N00	1411.00	NG200	NBR/CR Steel	Up to 16 bar
SDKHDD6D60300N00	2652.00	NG300	NBR/CR Steel	Up to 16 bar

Limit Switches

Part #	List Price $	Description
EAFSMK	95.00	Mechanical Limit Switch
EAFSIK	157.00	Inductive Limit Switch

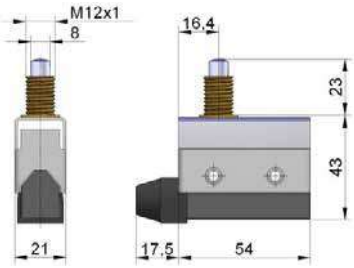

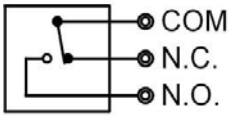

EAFSMK

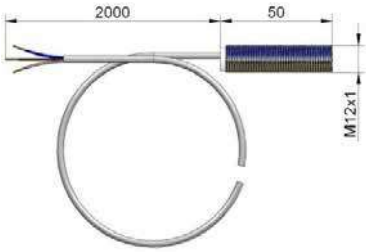

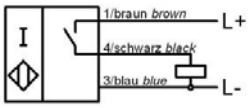

EAFSIK

Magnetic Oil Drain Plugs

Part #	List Price $	Thread	Dimensions mm				
			g	h	f	t	d
TCEM0G	13.00	1/8" BSPP	3	4	8	3	14
TCEM1G	13.00	1/4" BSPP	5	5	12	3	18
TCEM2G	14.00	3/8" BSPP	5	5	12	3	22
TCEM3G	19.00	1/2" BSPP	6	5	14	4	26
TCEM4G	29.00	3/4" BSPP	10	6	16	4	32
TCEM5G	34.00	1" BSPP	10	6	16	5	40
TCEM6G	67.00	1.1/4" BSPP	15	10	16	5	49

Note: includes metal washer

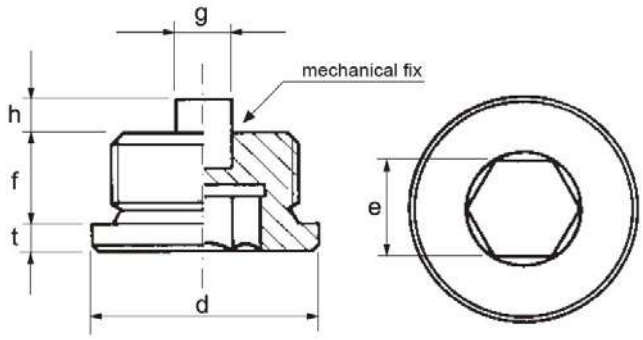

Magnetic Oil Filter Rods

Part #	List Price $	Thread	Dimensions mm				
			t	f	l	h	g
FMC1G	79.00	3/8" BSPP	7	10	80	70	9
FMC2G	96.00	1/2" BSPP	8.5	10	95	85	12
FMC3G	126.00	3/4" BSPP	9.5	12	102	90	17
FMC4G	159.00	1" BSPP	9.5	14	104	90	17

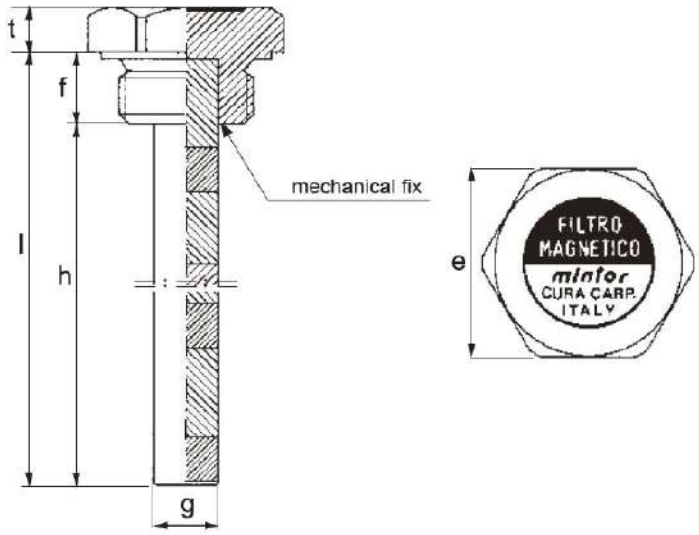

Filler Breathers

Part #	List Price $	Thread	Filler	Breather	Material	Dimensions mm						
						d	g	f	h	i	c	e
TRTCSF/Z	82.00	1" BSPP	800 µm	40 µm	Aluminium	45	33.3	14	42	82	25	40
TRTCSF/Z-NUT	9.00	Backing nuts to suit M12x1.75 thread (sold individually)										

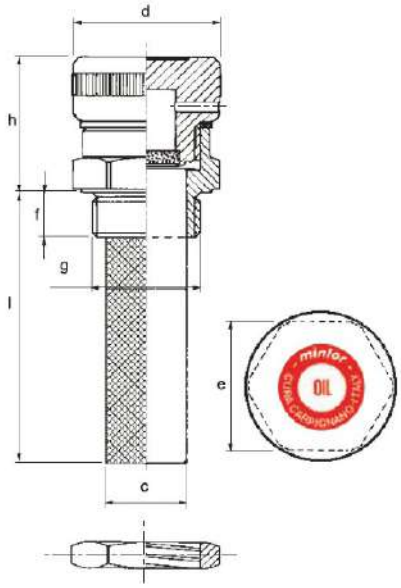

Threaded Breathers

Part #	List Price $	Thread	Material	Dimensions mm				
				h	f	i	g	d
TCLS/Z1G	16.00	1/4" BSPP	Aluminium	12	8	120	5	22
TCLS/Z2G	17.00	3/8" BSPP	Aluminium	13.5	10	170	5	26
TCLS/Z3G	20.00	1/2" BSPP	Aluminium	16.5	10	170	5	30
TCLS/Z4G	27.00	3/4" BSPP	Aluminium	21.5	12	200	5	40
TCLS/Z5G	38.00	1" BSPP	Aluminium	21.5	14	200	5	45

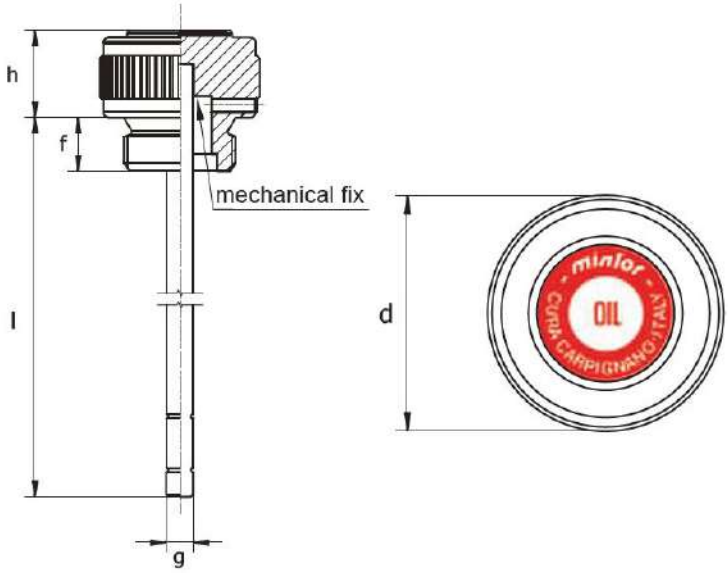

Filler Breathers

Part #	List Price $	Maximum Flow	Micron	Mount	Material
FB3	28.00	90 lpm	10 µm	3 bolt - PCD 41.3mm	Chrome Steel
FB6	44.00	400 lpm	10 µm	6 bolt - PCD 71.5mm	Chrome Steel
FSBP	58.00	400 lpm	10 µm	6 bolt - PCD 71.5mm	Polyamide
FB6LT	53.00	400 lpm	10 µm	6 bolt - PCD 71.5mm, lock tab	Chrome Steel
FB6HN	60.00	400 lpm	10 µm	6 bolt - PCD 71.5mm, high neck	Chrome Steel
FB6P5	66.00	400 lpm	10 µm	6 bolt - PCD 71.5mm, pressure valve 5psi	Chrome Steel
FB6SM	82.00	400 lpm	10 µm	6 bolt - side mount	Ch.Steel/Aluminium
PB25	34.00	720 lpm	40 µm	Push fit 1-1/2"	Chrome Steel

3 Bolt

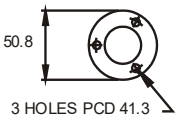

6 Bolt

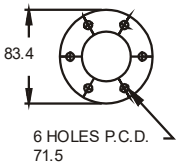

Side Mount

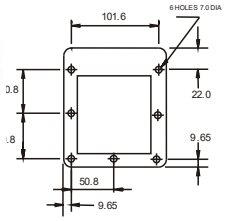

Threaded Breathers

Part #	List Price $	Maximum Flow	Micron	Thread	Material
TB14	22.00	90 lpm	10 µm	1/4" BSPP	Chrome/Steel
TB38	22.00	90 lpm	10 µm	3/8" BSPP	Chrome/Steel
TB12	39.00	400 lpm	10 µm	1/2" BSPP	Chrome/Steel
TB34	38.00	400 lpm	10 µm	3/4" BSPP	Chrome/Steel
TB34P5 (pressurised 5psi)	58.00	400 lpm	10 µm	3/4" BSPP	Chrome/Steel
TB1	46.00	400 lpm	10 µm	1" BSPP	Chrome/Steel
TB114	74.00	1000 lpm	10 µm	1.1/4" BSPP	Polyamide
TB112	74.00	1000 lpm	10 µm	1.1/2" BSPP	Polyamide
TB2	99.00	2000 lpm	10 µm	2" BSPP	Polyamide
TB212	139.00	4000 lpm	10 µm	2.1/2" BSPP	Polyamide
ABP03B	9.00	n/a	40 µm	3/8" BSPP	Polyamide
ABP04B	10.00	n/a	40 µm	1/2" BSPP	Polyamide
ABP06B	14.00	n/a	40 µm	3/4" BSPP	Polyamide
ABP08B	17.00	n/a	40 µm	1" BSPP	Polyamide

TB12

TB2

APB

Suction Strainer

Part #	List Price $	Micron	Flow	Dimensions mm			
				A	B	C	A/F
SS14	20.00	149 µm	8 lpm	1/4" BSPP	90	46	24
SS38	22.00	149 µm	12 lpm	3/8" BSPP	90	46	24
SS12	23.00	149 µm	20 lpm	1/2" BSPP	105	46	30
SS34	29.00	149 µm	28 lpm	3/4" BSPP	109	64	35
SS1	30.00	149 µm	40 lpm	1" BSPP	139	64	46
SS114	42.00	149 µm	60 lpm	1.1/4" BSPP	139	86	51
SS112	53.00	149 µm	120 lpm	1.1/2" BSPP	200	86	60
SS2	64.00	149 µm	160 lpm	2" BSPP	235	100	70
SS212	110.00	149 µm	300 lpm	2.1/2" BSPP	211	150	90
SS3	135.00	149 µm	400 lpm	3" BSPP	272	150	100

Suction Strainer with Relief

Part #	List Price $	Micron	Flow	Dimensions mm			
				A	B	C	A/F
SS14B3	26.00	149 µm	8 lpm	1/4" BSPP	90	46	24
SS38B3	28.00	149 µm	12 lpm	3/8" BSPP	90	46	24
SS12B3	30.00	149 µm	20 lpm	1/2" BSPP	105	46	30
SS34B3	37.00	149 µm	28 lpm	3/4" BSPP	109	64	35
SS1B3	40.00	149 µm	40 lpm	1" BSPP	139	64	46
SS114B3	54.00	149 µm	60 lpm	1.1/4" BSPP	139	86	51
SS112B3	67.00	149 µm	80 lpm	1.1/2" BSPP	168	86	60

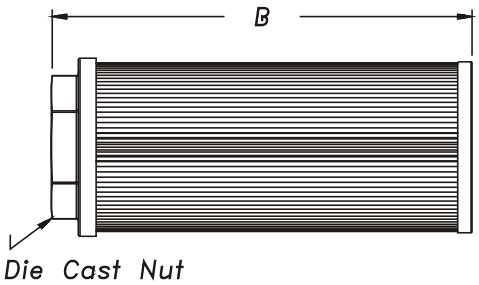

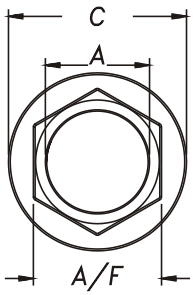

Diffusers

Part #	List Price $	Material Litres	Size
DIF34	30.00	3/4" BSPP	50 lpm
DIF1	43.00	1" BSPP	100 lpm
DIF114	46.00	1.1/4" BSPP	200 lpm

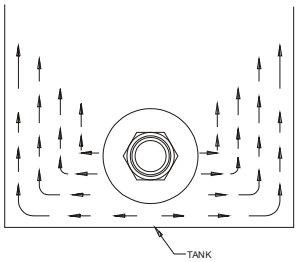

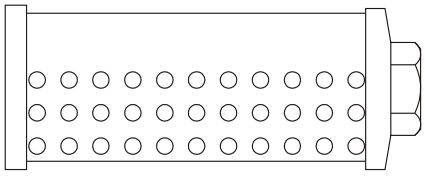

Venting Plug

Part #	List Price $	Thread	Pressure	Material	Dimensions mm		
					t	f	e
TSVV1G	24.00	1/4" BSPP	0-10 bar	Aluminium	10	10	17
TSVV2G	25.00	3/8" BSPP	0-10 bar	Aluminium	10	10	22
TSVV3G	31.00	1/2" BSPP	0-10 bar	Aluminium	10	10	27

Normally closed to atmosphere, with 2-way adjustable venting

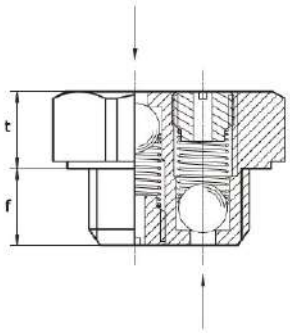

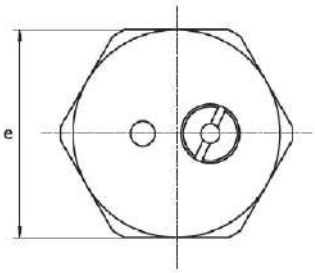

Sight Gauges

Part #	List Price $	Thread	Material	Dimensions mm				
				f	t	v	e	c
IFC0G	15.00	3/8" BSPP	Aluminium	9	6	16	24	9
IFC1G	17.00	1/2" BSPP	Aluminium	10	9.5	16	27	9
IFC2G	19.00	3/4" BSPP	Aluminium	11	10	16	32	9
IFC3G	26.00	1" BSPP	Aluminium	14	10	19	40	13
IFC4G	50.00	1.1/4" BSPP	Aluminium	15	10.5	25	50	17
IFC5G	57.00	1.1/2" BSPP	Aluminium	15	10.5	33	55	23
IFC6G	109.00	2" BSPP	Aluminium	15	14	36	70	24

IFC Series

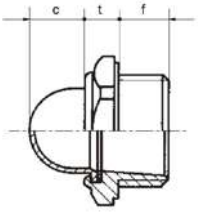

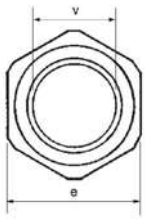

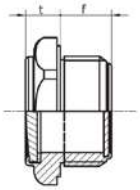

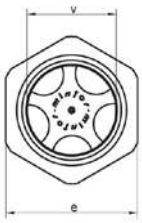

TLA Series

Sight Gauges

Part #	List Price $	Thread	Material	Dimensions mm			
				f	t	v	e
TLA1G	11.00	1/4" BSPP	Aluminium	8	7	10	17
TLA2G	13.00	3/8" BSPP	Aluminium	10.5	7	13	22
TLA3G	15.00	1/2" BSPP	Aluminium	11	9	16	27
TLA4G	17.00	3/4" BSPP	Aluminium	12	9	21	32
TLA5G	24.00	1" BSPP	Aluminium	15.5	10	27	40
TLA6G	46.00	1.1/4" BSPP	Aluminium	15	10	37	40
TLA7G	53.00	1.1/2" BSPP	Aluminium	15	10	40	55
TLA8G	103.00	2" BSPP	Aluminium	17	14	50	70

Sight Gauges

Part #	List Price $	Material	A	Dimensions mm	
				B	F
SG38	14.00	Steel	3/8" BSPP	10	22
SGSG12	16.00	Steel	1/2" BSPP	14	25
SG34	19.00	Steel	3/4" BSPP	20	32
SG1	22.00	Steel	1" BSPP	24	38
SG114	28.00	Steel	1.1/4" BSPP	33	44
SG112	32.00	Steel	1.1/2" BSPP	39	55

SG

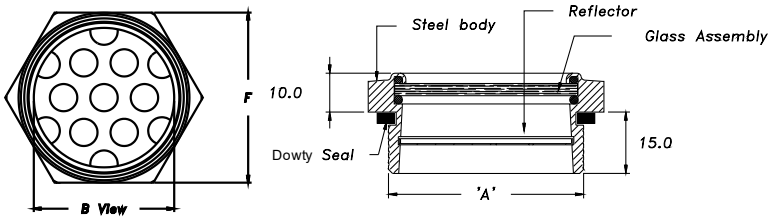

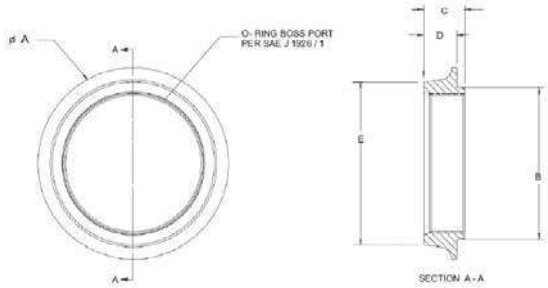

SGWN

Sight Gauge Weld Flanges

Part #	List Price $	Material	Dimensions mm				
			A	B	C	D	E
SGWN38	10.00	Steel	38.10	23.62	14.22	7.87	25.40
SGWN12	10.00	Steel	54.10	35.05	17.52	11.17	36.57
SGWN34	15.00	Steel	54.10	35.05	17.52	11.17	36.57
SGWN1	19.00	Steel	60.45	42.16	19.05	12.70	44.45
SGWN114	23.00	Steel	68.32	50.80	19.05	12.70	54.10
SGWN112	28.00	Steel	76.20	57.15	21.74	19.05	60.45

Flanged Vertical Level Gauge

Part #	List Price $	Material	Dimensions mm							
			L	R	l	r	V1	V2	h	a
LVF60	145.00	Aluminium	60	45	28	35	39	18	11.5	4
LVF80	171.00	Aluminium	80	45	45	35	59	18	11.5	4
LVF100	181.00	Aluminium	100	45	35	35	78	18	11.5	4

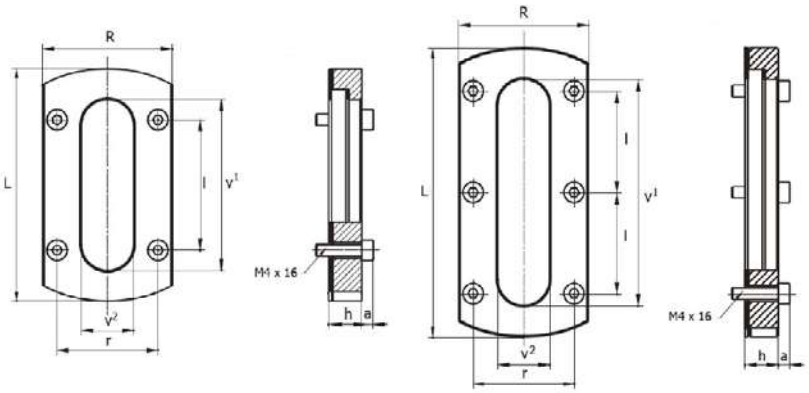

Inspection Port Hole

Part #	List Price $	Material	Dimensions mm			
			f	t	v	e
OBLO-100	172.00	Aluminium housing	100	150	130	19.5
OBLO-148	235.00	Aluminium housing	148	202	180	21.5

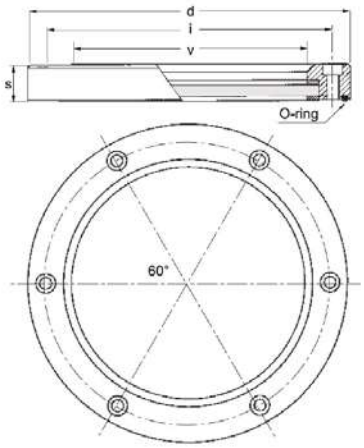

OLBO-100

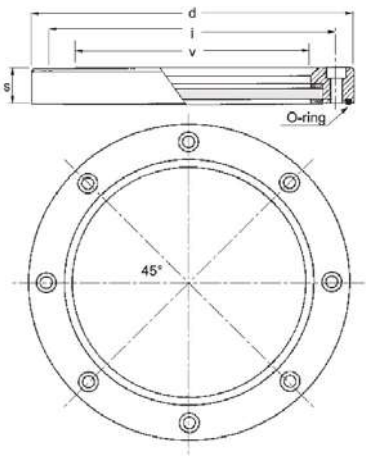

OLBO-148

Vertical Level Indicator (Float System)

Part #	List Price $	Material	Dimensions mm				
			L	d	h	l	r
LGF681	196.00	Aluminium flange cover	200	80	16	203	68
LGF682	199.00	Aluminium flange cover	250	80	16	253	68
LGF683	200.00	Aluminium flange cover	300	80	16	303	68
LGF684	202.00	Aluminium flange cover	350	80	16	353	68
LGF685	204.00	Aluminium flange cover	400	80	16	403	68

Note: When choosing length, the gauge must not be below the pump section

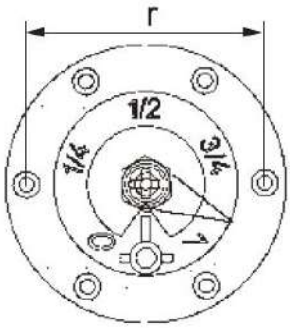

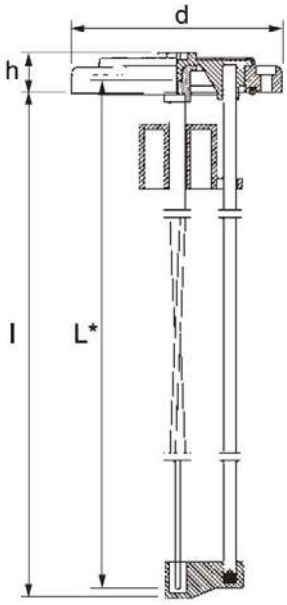

Level Gauge

Part #	List Price $	Material	Dimensions mm								
			a	L	b	e	q	d	c	f	l
GLV1G	194.00	Aluminium	3/8" BSPP	500	40	22	30	22	43	10	530
GLV2G	230.00	Aluminium	3/8" BSPP	1000	40	22	30	22	43	10	1030
GLV-2ODAD20A	1.00	Backing nuts to suit 3/8" BSPP thread (sold individually)									

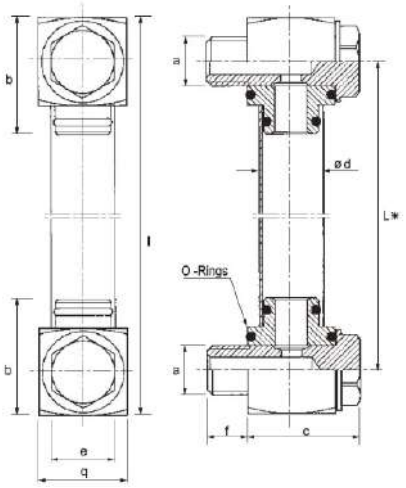

Level Gauge

Part #	List Price $	Size	Type	Dimensions mm					
				A	B	C	D	F	M
LG1	33.00	3" / 76mm	Level	76.2	32	23	35	111	M10
LGT1	39.00	3" / 76mm	Level - Temperature	76.2	32	23	35	111	M10
LG2	36.00	5" / 127mm	Level	127	76	23	35	162	M12
LGT2	42.00	5" / 127mm	Level - Temperature	127	76	23	35	162	M12
LG3	57.00	10" / 254mm	Level	254	200	23	35	289	M12
LGT3	63.00	10" / 254mm	Level - Temperature	254	200	23	35	289	M12

3" / 5"

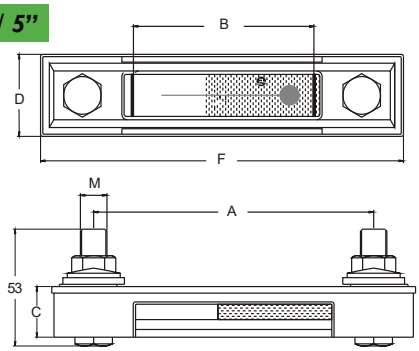

10"

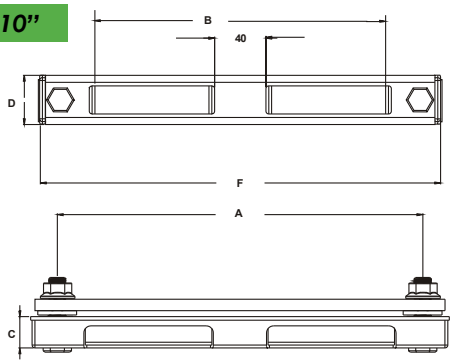

LG1

LGT2

LGT3

Electrical Level Gauge

Part #	List Price $	Material	Dimensions mm							
			a	L	e	q	d	c	f	l
GLVE1G	355.00	Aluminium	3/8" BSPP	500	22	30	22	43	10	530
GLVE2G	398.00	Aluminium	3/8" BSPP	1000	22	30	22	43	10	1030
GLV-2ODAD20A	1.00	Backing nuts to suit 3/8" BSPP thread (sold individually)								

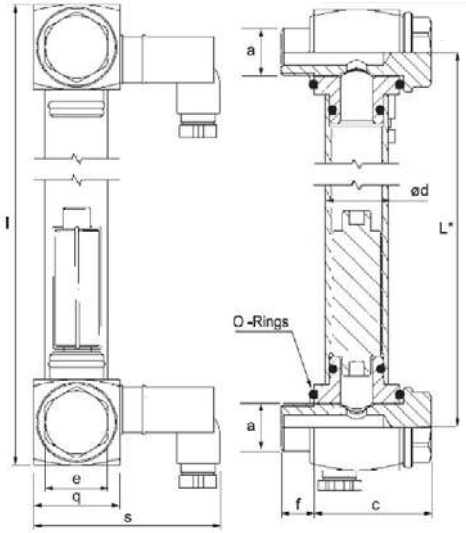

Electrical Information

Contact	N / O
Sensing	Min & max oil level
AC	140v AC
DC	200v DC
Amps	0.5a
Watts	10w

Electrical Level Gauge

Part #	List Price $	Material	Dimensions mm									
			L	r	v	C	i	f	h	a	b	s
PLE2	319.00	Aluminium	160	34	88	16.5	127	M12	21.5	16	29	59
PLE3	378.00	Aluminium	287	34	215	16.5	254	M12	21.5	16	29	59

Electrical Information

Contact	N / O
Sensing	Min oil level
Lead Length	2500mm
AC	250v AC
DC	250v DC
Amps	0.5a
IP	IP67

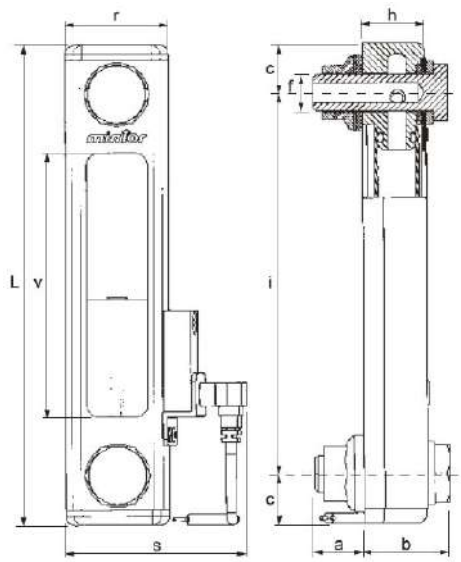

Electrical Level Gauge

Part #	List Price $	Size	Description	Dimensions mm		
				M	A	H
LVK10AM121SSP01	375.00	3"	Low level - N/O switch	M12	76	108
LVK10AM121PSP01	645.00	3"	Low level - N/O switch, PT100 temp sensor	M12	76	108
LVK20AM121SSP01	405.00	5"	Low level - N/O switch	M12	127	159
LVK20AM121PSP01	675.00	5"	Low level - N/O switch, PT100 temp sensor	M12	127	159
LVK20AM121T2P01	645.00	5"	Low level - N/O switch, 60° NO temp sensor	M12	127	159
LVK30AM121SSP01	555.00	10"	Low level - N/O switch	M12	254	286
LVK30AM121PSP01	825.00	10"	Low level - N/O switch, PT100 temp sensor	M12	254	286
LVK30AM121T2P01	795.00	10"	Low level - N/O switch, 60° NO temp sensor	M12	254	286
LVK30AM121T3P01	795.00	10"	Low level - N/O switch, 70° NO temp sensor	M12	254	286
TV12	302.00	Visual temperature gauge				

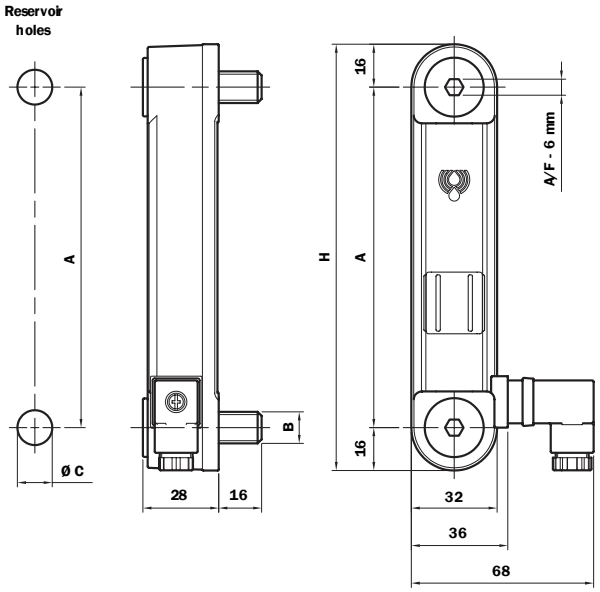

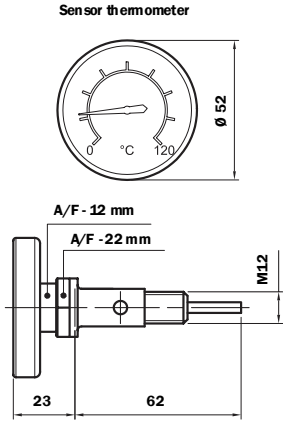

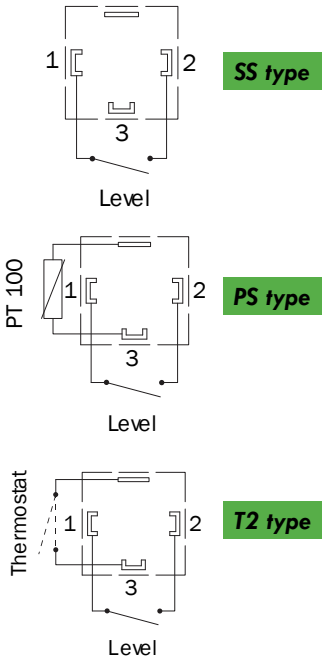

3"

5"

10"

TV12