CATFORD ENGINEERING PRODUCTS

Jamestown
SA 5491

All Prices Excluding GST

Phone: 0418 641 566

www.catford.com.au sales@catford.com.au

Power Transmission

*Bell Housings *Motor & Pump Side Couplings
*PTO Speed Increase Gearboxes *EM Clutches
*Spline Drive Couplings, Bearing Mounts,
*Vibration Absorbers *Gaskets

Lot 25, Mannanarie Road, Jamestown, South Australia 5491

PO Box 178, Jamestown, South Australia 5491

0418 641 566

sales@catford.com.au

Due to fluctuations in the Australian dollar and the economic climate, please be advised that all prices are subject to change.
Please contact us to confirm pricing.

All prices stated within are exclusive of GST
(All prices are correct as of January 1st 2023, but Catford Engineering reserve the right to change these prices without notice)

Power Transmission

CATFORD ENGINEERING PRODUCTS

Jamestown
SA 5491

Phone: 0418 641 566

www.catford.com.au sales@catford.com.au

Order Codes for HEX-FLX Flywheel Coupling

Flywheel Drive Plate		HEX-FLX Hub		Pump Mount Plate
B-065 6-1/2" Flywheel	-	HB2-05 5/8" Straight Keyed	-	GN2 SAE A/SAE 5

Full example part number: B-065-HB2-05-GN2

FLYWHEEL DRIVE PLATE	List Price $
B-065	173.00
C-075	182.00
C-080	182.00
C-010	214.00
DT-115	394.00

HEX-FLX HUB	List Price $
HB2-39	180.00
HB2-07	180.00
HB1-41	180.00
HB1-43	180.00
HB2-88	200.00
HB1-91	200.00
HB2-92	200.00
HB1-89	300.00
HC1-39	240.00
HC1-07	240.00
HC1-41	240.00
HC1-43	240.00
HC1-88	310.00
HC1-91	260.00
HC1-92	260.00
HC1-89	260.00
HC1-94	310.00
HC4-91	400.00
HC5-39	380.00
HC4-09	380.00
HC3-07	420.00
HC3-41	420.00
HC3-43	420.00
HC4-88	440.00
HC3-91	440.00
HC3-92	440.00
HC3-89	440.00
HC3-94	440.00
HDT3-S3	650.00
HDT2-90	650.00
HDT1-92	650.00

PUMP MOUNT PLATE	List Price $
HN2	1183.00
HO2	1123.00
HO4	1123.00
GN2	950.00
GO2	950.00
GO24	950.00
GX4	950.00
ESP1	1020.00
EO2	1020.00
EO24	1020.00
EX24	1020.00
EX4	1020.00
DO24	1165.00
DX24	1165.00
DS4	1165.00
CO24	1620.00
CX2	1620.00
CX4	1620.00
CS4	1620.00

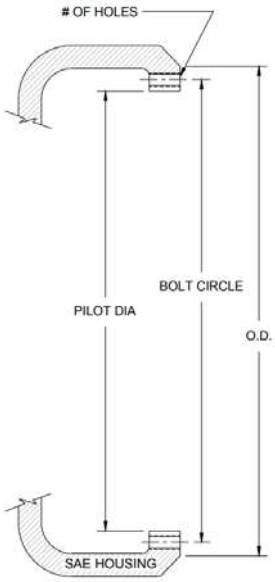

SAE Housing

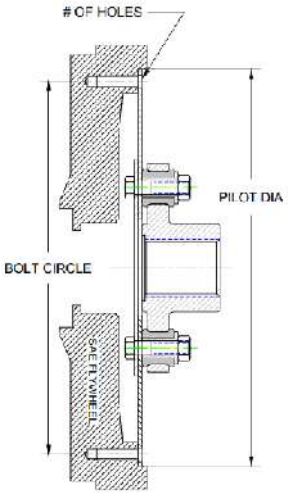

SAE Flywheel

For more details please visit www.hayescouplings.com

Flywheel Drive Plates

Part #	Flywheel	Pump	Flywheel Dimensions			HP Range
			Bolt Circle	Pilot Diameter	# of Holes	
B-065	6-1/2"	SAE A/B/C	200.025mm 7.875"	215.9mm 8.5"	6 @ 8.7mm	30-75 hp
C-075	7-1/2"	SAE A/B/C	222.25mm 8.75"	241.3mm 9.5"	8 @ 8.7mm	65-175 hp
NEW C-080	8"	SAE A/B	263.52mm 10.375"	244.47mm 9.625"	6 @ 10.5mm	65-175 hp
C-010	10"	SAE A/B/C	295.2mm 11.625"	314.325mm 12.375"	8 @ 10.5mm	65-175 hp
NEW DT-115	11-1/2"	SAE B/C/D/E	352.42mm 13.875"	33.37mm 13.125"	8 @ 10.5mm	200-600 hp

Pump Shaft Coupling HEX-FLX Hubs

Part #	Flywheel	Shaft Size	Spline OD	Keyway	Pump Flange	Torque		HP Rating
						Nominal	Max	
HB2-39	6.1/2"	5/8" Straight Keyed	-	5/32"	SAE A	225	365	20-75 hp
HB2-07	6.1/2"	3/4" Straight Keyed	-	3/16"	SAE A	225	365	20-75 hp
HB1-41	6.1/2"	7/8" Straight Keyed	-	1/4"	SAE B	225	365	20-75 hp
HB1-43	6.1/2"	1.1/4" Straight Keyed	-	5/16"	SAE C	225	365	20-75 hp
HB2-88	6.1/2"	9 Tooth Spline	5/8"	-	SAE A	225	365	20-75 hp
HB1-91	6.1/2"	13 Tooth Spline	7/8"	-	SAE B	225	365	20-75 hp
HB2-92	6.1/2"	14 Tooth Spline	1.1/4"	-	SAE C	225	365	20-75 hp
NEW HB1-89	6.1/2"	15 Tooth Spline	1"	-	SAE A	225	365	20-75 hp
HC1-39	7.1/2"	5/8" Straight Keyed	-	5/32"	SAE A	585	1125	75-200 hp
HC1-07	7.1/2"	3/4 Straight Keyed	-	3/16"	SAE A	585	1125	75-200 hp
HC1-41	7.1/2"	7/8" Straight Keyed	-	1/4"	SAE B	585	1125	75-200 hp
HC1-43	7.1/2"	1.1/4" Straight Keyed	-	5/16"	SAE C	585	1125	75-200 hp
HC1-88	7.1/2"	9 Tooth Spline	5/8"	-	SAE A	585	1125	75-200 hp
HC1-91	7.1/2"	13 Tooth Spline	7/8"	-	SAE B	585	1125	75-200 hp
NEW HC1-92	7.1/2"	14 Tooth Spline	1.1/4"	-	SAE C	585	1125	75-200 hp
NEW HC1-89	7.1/2"	15 Tooth Spline	1"	-	SAE B	585	1125	75-200 hp
NEW HC1-94	7.1/2"	21 Tooth Spline	1.3/8"	-	SAE C	585	1125	75-200 hp
NEW HC4-91	8"	13 Tooth Spline	7/8"	-	SAE B	585	1125	75-200 hp
NEW HC5-39	8"	5/8" Straight Keyed	-	5/32"	SAE A	585	1125	75-200 hp
NEW HC4-09	8"	7/8" Straight Keyed	-	3/16"	SAE B	585	1125	75-200 hp
HC3-07	10"	3/4" Straight Keyed	-	3/16"	SAE A	585	1125	75-200 hp
HC3-41	10"	7/8" Straight Keyed	-	1/4"	SAE B	585	1125	75-200 hp
HC3-43	10"	1.1/4" Straight Keyed	-	5/16"	SAE C	585	1125	75-200 hp
HC4-88	10"	9 Tooth Spline	5/8"	-	SAE A	585	1125	75-200 hp
HC3-91	10"	13 Tooth Spline	7/8"	-	SAE B	585	1125	75-200 hp
HC3-92	10"	14 Tooth Spline	1.1/4"	-	SAE C	585	1125	75-200 hp
NEW HC3-89	10"	15 Tooth Spine	1"	-	SAE B	585	1125	75-200 hp
NEW HC3-94	10"	21 Tooth Spline	1.1/4"	-	SAE C	585	1125	75-200 hp
NEW HDT3-S3	11.1/2"	13 Tooth Spline (Turned down flywheel)	1.3/4"	-	SAE D	1300	3300	200-600 hp
NEW HDT2-90	11.1/2"	13 Tooth Spine	1.3/4"	-	SAE D	1300	3300	200-600 hp
NEW HDT1-92	11.1/2"	14 Tooth Spline	1.3/4"	-	SAE C	1300	3300	200-600 hp

Pump Mount Plate

Part #	Engine Mount	Pump Mount	Pump Mounting	Plate Thickness	Engine Mount Dimensions		
					Bolt Circle		# of Holes
HN2	SAE6	SAE A	2 Bolt	5/8"	285.75mm	11.25"	8
HO2	SAE6	SAE B	2 Bolt	5/8"	285.75mm	11.25"	8
HO4	SAE6	SAE B	4 Bolt	5/8"	285.75mm	11.25"	8
GN2	SAE5	SAE A	2 Bolt	5/8"	333.502mm	13.13"	8
GO2	SAE5	SAE B	2 Bolt	5/8"	333.502mm	13.13"	8
GO24	SAE5	SAE B	2/4 Bolt	5/8"	333.502mm	13.13"	8
GX4	SAE5	SAE C	4 Bolt	5/8"	333.502mm	13.13"	8
ESP1	SAE4	SAE A	2 Bolt	5/8"	381mm	15"	12
EO2	SAE4	SAE B	2 Bolt	5/8"	381mm	15"	12
EO24	SAE4	SAE B	2/4 Bolt	5/8"	381mm	15"	12
NEW EX24	SAE4	SAE C	2/4 Bolt	5/8"	381mm	15"	12
EX4	SAE4	SAE C	4 Bolt	5/8"	381mm	15"	12
NEW DO24	SAE3	SAE B	2/4 Bolt	5/8"	428.625mm	16.875"	12
NEW DX24	SAE3	SAE C	2/4 Bolt	5/8"	428.625mm	16.875"	12
NEW DS4	SAE3	SAE D	4 Bolt	5/8"	428.625mm	16.875"	12
NEW CO24	SAE2	SAE B	2/4 Bolt	5/8"	466.725mm	18.375"	12
NEW CX2	SAE2	SAE C	2 Bolt	5/8"	466.725mm	18.375"	12
NEW CX4	SAE 2	SAE C	4 Bolt	5/8"	466.725mm	18.375"	12
NEW CS4	SAE 2	SAE D	4 Bolt	5/8"	466.725mm	18.375"	12

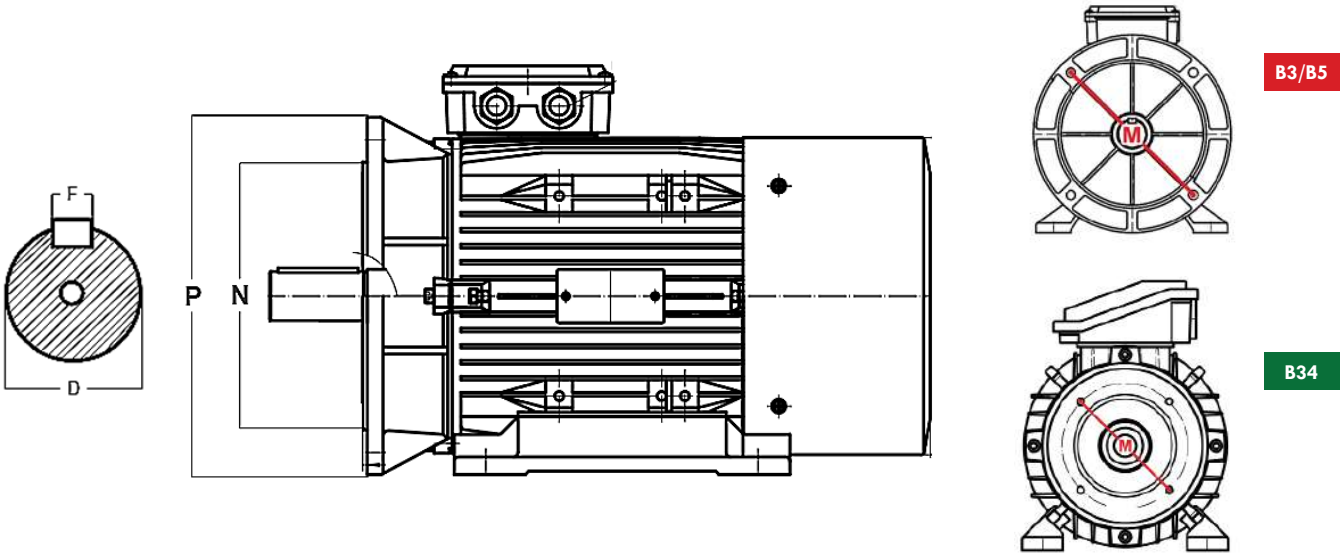

Bell Housings Frame Size Guide (240v AC)

Frame	kW	Voltage	Pole	Dimensions mm							
				D	F	B3/B5			B34		
						N	M	P	N	M	P
63	0.18	240v AC	4-pole	11	4	95	115	140	60	75	90
71	0.25 - 0.37	240v AC	4-pole	14	5	110	130	160	70	85	105
80	0.55 - 0.75	240v AC	4-pole	19	6	130	165	200	80	100	120
90	1.1 - 1.5	240v AC	4-pole	24	8	130	165	200	95	115	140
100	2.2 - 3.7	240v AC	4-pole	28	8	180	215	250	110	130	160
112	2.2 - 3.7	240v AC	4-pole	28	8	180	215	250	110	130	160

Bell Housings Frame Size Guide (415v AC)

Frame	kW	Voltage	Pole	Dimensions mm							
				D	F	B3/B5			B34		
						N	M	P	N	M	P
56	0.06 - 0.12	415v AC	4-pole	9	3	80	100	120	50	65	80
63	0.12 - 0.18	415v AC	4-pole	11	4	95	115	140	60	75	90
71	0.25 - 0.37	415v AC	4-pole	14	5	110	130	160	70	85	105
80	0.55 - 0.75	415v AC	4-pole	19	6	130	165	200	80	100	120
90	1.1 - 2.2	415v AC	4-pole	24	8	130	165	200	95	115	140
100	2.2 - 5.5	415v AC	4-pole	28	8	180	215	250	110	130	160
112	2.2 - 5.5	415v AC	4-pole	28	8	180	215	250	110	130	160
132	7.5 - 11	415v AC	4-pole	38	10	230	265	300	130	165	200
160	11 - 15	415v AC	4-pole	42	12	250	300	350	180	215	150
180	18.5 - 22	415v AC	4-pole	48	14	250	300	350			
200	30 - 37	415v AC	4-pole	55	16	300	350	400			
225	37 - 45	415v AC	4-pole	55	16	350	400	450			
250	55	415v AC	4-pole	65	18	450	500	550			

Bell Housings - Electric Motors (DIN Pumps)

Part #	List Price $	Motor Size	Pump Side	Dimensions mm							
				D1	D2	D3	D4	H1	H2	F	P
LMG105MFS05M4E	111.00	71 B34	DIN Group 05	70	85	105	74	67	9	n/a	7
LMG105MFS1M04E	111.00	71 B34	DIN Group 1	70	85	105	74	67	9	n/a	7
LMG105MFS1004E	111.00	71 B34	DIN Group 1	70	85	105	74	67	9	n/a	7
LMG120MFS05M4E	127.00	80 B34	DIN Group 05	80	100	120	84	87	9	n/a	7
LMG120MFS1M04E	127.00	80 B34	DIN Group 1	80	100	120	84	87	9	n/a	7
LMG120MFS1004E	127.00	80 B34	DIN Group 1	80	100	120	84	87	9	n/a	7
LMG121MFS2004E	127.00	80 B34	DIN Group 2	80	100	120	84	95	12	n/a	7
LMG141MFS05M4E	97.00	63 B3/B5 - 90 B14	DIN Group 05	95	115	140	100	95	13	M8	9
LMG141MFS1M04E	97.00	63 B3/B5 - 90 B14	DIN Group 1	95	115	140	100	95	13	M8	9
LMG141MFS1004E	97.00	63 B3/B5 - 90 B14	DIN Group 1	95	115	140	100	95	13	M8	9
LMG141MFS2004E	97.00	63 B3/B5 - 90 B14	DIN Group 2	95	115	140	100	95	13	M8	9
LMG160MFS05M4S	67.00	71 B3/B5	DIN Group 05	110	130	160	110	70	15	M8	9
LMG160MFS1004E	67.00	71 B3/B5	DIN Group 1	110	130	160	110	70	15	M8	9
LMG161MFS1M04E	103.00	71 B3/B5	DIN Group 1	110	130	160	110	105	15	M8	9
LMG161MFS2004E	103.00	71 B3/B5	DIN Group 2	110	130	160	110	105	15	M8	9
LMG200MFS05M4S	88.00	80-90 B3/B5	DIN Group 05	130	165	200	135	87	18	M10	11
LMG200MFS1004E	88.00	80-90 B3/B5	DIN Group 1	130	165	200	135	87	18	M10	11
LMG201MFS2004E	88.00	80-90 B3/B5	DIN Group 2	130	165	200	135	95	18	M10	11
LMG250MFS1004S	111.00	110-112 B3/B5	DIN Group 1	180	215	250	185	105	22	M12	14
LMG250MFS2004E	111.00	110-112 B3/B5	DIN Group 2	180	215	250	185	105	22	M12	14
LMG251MFS3004E	295.00	110-112 B3/B5	DIN Group 3	180	215	250	185	126	22	M12	14
LMG300MFS2004E	190.00	132 B3/B5	DIN Group 2	230	265	300	235	145	23	M12	14
LMG300MFS3M04E	190.00	132 B3/B5	DIN Group 3	230	265	300	235	145	23	M12	14
LMG351MFS2004E	371.00	160-180 B3/B5	DIN Group 2	250	300	350	255	179	31	M16	18
LMG351MFS3M04E	371.00	160-180 B3/B5	DIN Group 3	250	300	350	255	179	31	M16	18
NEW LMG400MFS2004E	501.00	200 B3/B5	DIN Group 2	300	350	399	305	201	31	M16	18
NEW LMG400MFS3004E	535.00	200 B3/B5	DIN Group 3	300	350	399	305	201	31	M16	18

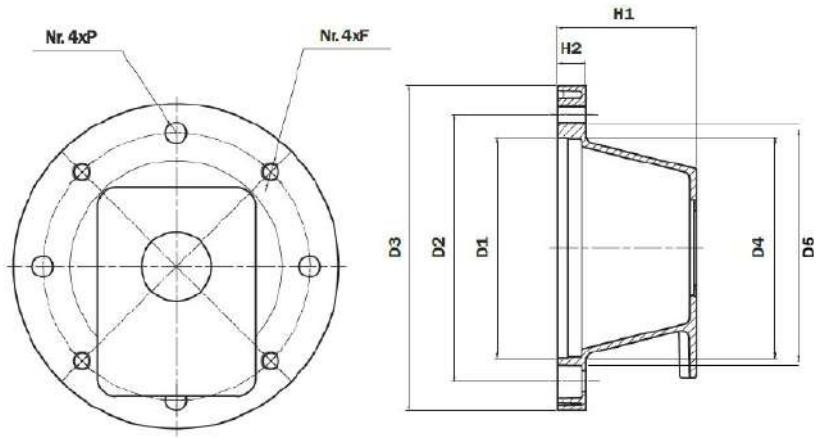

Bell Housings - Engine

Part #	List Price $	Pump Size	Engine	Dimensions mm									Access Covers Needed
				D1	D2	D3	D4	D5	D6	H1	H2	P	
LMB110T099A002	145.00	DIN Group 1	3-5.5	67.5	92	-	110	72	40	96	99	9	-
LMB155T140C002M3-1	224.00	DIN Group 1	5-13.5	110	127	146	155	72	67.5	140	143	10	-
LMB155T140C002M3-2	224.00	DIN Group 2	5-13.5	110	127	146	155	96	67.5	140	143	10	-
LMB155T140S060	238.00	SAE A Group 2	5-13.5	110	127	146	155	106.4	82.55	140	143	10	-
G-10-101-4.44	311.00	4F17	7 HP	45.2	92	-	88.9	72.2	45.2	113	-	-	2
AC10	40.00	Access Cover											

LMB110

LMB155

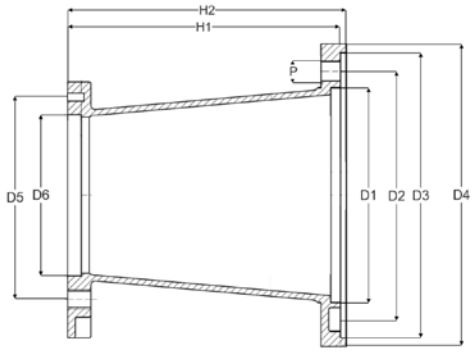

Bell Housings - Electric Motors (SAE Pumps)

Part #	List Price $	Motor Size	Pump Side	Dimensions mm								
				D1	D2	D3	D4	D5	H1	H2	F	P
LMC200AFSW060	120.00	**80-90** B3/B5	SAE A	130	165	200	125	185	125	18	M10	11
LMC250AFRC080	424.00	**D100-112** B3/B5	SAE C 2-bolt	180	215	250	175	186	126	19	M12	14
LMC250AFSQ060	185.00	**D100-112** B3/B5	SAE A	180	215	250	175	186	138	19	M12	14
LMC250AFSQ070	185.00	**D100-112** B3/B5	SAE B	180	215	250	175	186	138	19	M12	14
LMC300AFSX060	255.00	**D132** B3/B5	SAE A	230	265	300	230	285	170	23	M12	14
LMC300AFSX070	255.00	**D132** B3/B5	SAE B	230	265	300	230	285	170	23	M12	14
LMC350AFSU070	350.00	**D160-180** B3/B5	SAE B	250	300	350	240	254	194	31	M16	18
LMC350AFSU080	350.00	**D160-180** B3/B5	SAE C 2-bolt	250	300	350	240	254	194	31	M16	18
LMC400AFSV070	484.00	**200** B3/B5	SAE B	300	350	400	280	305	201	31	M16	18
LMC400AFSV080	484.00	**200** B3/B5	SAE C 2-bolt	300	350	400	280	305	201	31	M16	18
LMC450AFSZ070	1129.00	**225** B3/B5	SAE B	350	400	450	320	350	250	31	M16	M16
LMC450AFSZ080	1129.00	**225** B3/B5	SAE C 2-bolt	350	400	450	320	350	250	31	M16	M16

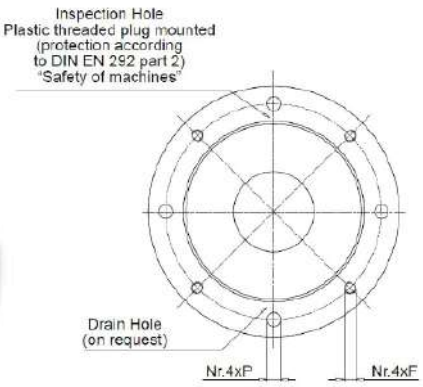

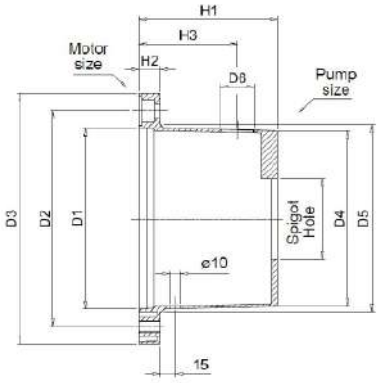

Bell Housings - Electric Motor Base

Part #	List Price $	Motor Size
BMT550A21567	1222.00	250 B3/B5

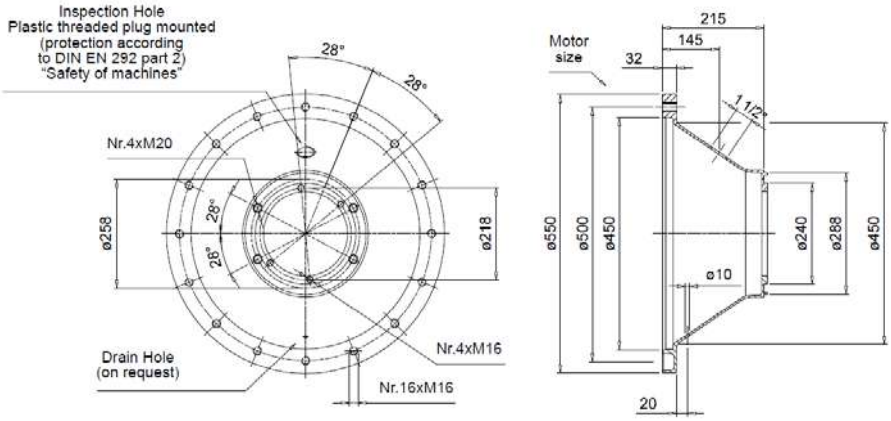

Bell Housings - Pump Flange (SAE)

Part #	List Price $	Pump Flange	Dimensions mm			
			H1	D1	D2	P
FP6045S070	292.00	SAE B 2-bolt	45	258	240	17
FP6032S080	262.00	SAE C 2-bolt	45	258	240	17

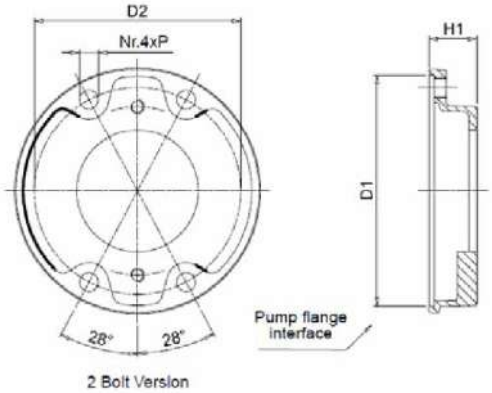

Pump Side Couplings DIN

Part #	List Price $	Pump	Shaft Size	Material	Dimension mm				
					De	L	L1	Ø	Key
SERIES 0									
SGEA01FS05M	22.00	Group 05	6mm	Aluminium	44	10	17	6	2
SGEA01FS05C	22.00	Group 05	7mm	Aluminium	44	10	17	6	2
SGEA01FS100	22.00	DIN Group 1	1:8 Taper	Aluminium	44	14.5	16	9.7	2.4
SERIES 2									
SGEA21FS100	32.00	DIN Group 1	1:8 Taper	Aluminium	70	14.5	21.5	9.7	2
SGEA21FSZFR	31.00	DIN Group 2	1:5 Taper	Aluminium	70	20	21.5	16.9	3
SGEA21FS200	32.00	DIN Group 2	1:8 Taper	Aluminium	70	21.5	21.5	17.2	4
SGEA21FS300	32.00	DIN Group 3	1:8 Taper	Aluminium	70	27	41	21.6	4
SERIES 3									
SGEA31FSZFR	46.00	DIN Group 2	1:5 Taper	Aluminium	85	17	37	16.9	3
SGEA31FS200	50.00	DIN Group 2	1:8 Taper	Aluminium	85	23	37	17.2	4
SGEA31FS300	50.00	DIN Group 3	1:8 Taper	Aluminium	85	27	37	21.6	4
SERIES 5									
SGEA51FS200	76.00	DIN Group 2	1:8 Taper	Aluminium	109.5	23.5	32	17.2	4
SGEA51FS300	76.00	DIN Group 3	1:8 Taper	Aluminium	109.5	25	32	21.6	4
SERIES 6									
SGEG60FS300	409.00	DIN Group 3	1:8 Taper	Cast Iron	120	25.5	35	21.6	4

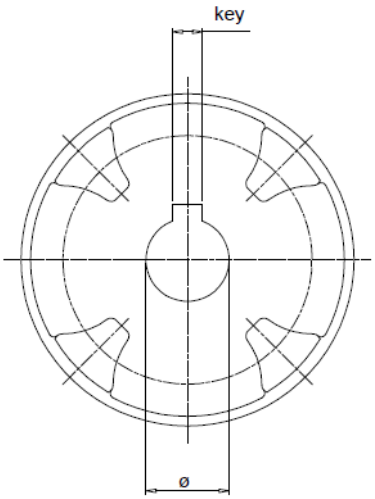

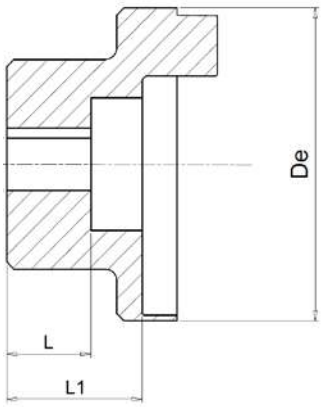

Pump Side Couplings SAE

Part #	List Price $	Pump	Shaft Size	Material	Dimension mm				
					De	L	L1	Ø	Key
SERIES 0									
SGEA01H09019FG	69.00	Group 1 SAE AA	1/2" Keyed	Aluminium	44	19	M5	1/2"	1/8"
SGEA01H06019FG	66.00	SAE A	5/8" keyed	Aluminium	44	19	M5	5/8"	3/16"
SERIES 2									
SGEA21H09023FG	47.00	Group 1 SAE AA	1/2" Keyed	Aluminium	70	14.5	21.5	1/2"	1/8"
SGEA21H06023FG	47.00	SAE A	5/8" Keyed	Aluminium	70	14.5	21.5	5/8"	3/16"
SGEA21L00050FG	62.00	SAE A	5/8" Keyed	Aluminium	70	14.5	21.5	5/8"	5/32"
SGEA21G01050FG	62.00	SAE A	3/4" Keyed	Aluminium	70	14.5	21.5	3/4"	3/16"
SGEA21G020502EFG	62.00	SAE B	7/8" Keyed	Aluminium	70	14.5	21.5	7/8"	3/16"
SGEA21C020502HFG	62.00	-	16mm	Aluminium	70	50	-	16	4
SERIES 3									
SGEA31L00040FG	97.00	SAE A	5/8" Keyed	Aluminium	85	14.5	37	5/8"	5/32"
SGEA31G01040FG	95.00	SAE AA	3/4" Keyed	Aluminium	85	14.5	37	3/4"	3/16"
SGEA31G020502EFG	78.00	SAE B	7/8" Keyed	Aluminium	85	14.5	37	7/8"	3/16"
SGEA31C03040FG	95.00	-	16mm Keyed	Aluminium	85	28	-	16	5
SERIES 4									
NEW SGEG40PD0540	407.00	SAE A	9T 16/32	Cast Iron	95	40	-	5/8"	-
NEW SGEG40PD0635	407.00	SAE A/SAE B	11T 16/32	Cast Iron	95	35	-	3/4"	-
NEW SGEG40PD0835	407.00	SAE B	13T 16/32	Cast Iron	95	35	-	7/8"	-
NEW SGEG40PD3640	407.00	SAE A	10T 16/32	Cast Iron	95	40	-	17.04mm	-
NEW SGEG40PD0930	407.00	SAE B-B	15T 16/32	Cast Iron	95	30	-	1"	-
SERIES 5									
SGEA51G020502EFG	97.00	SAE B	7/8" Keyed	Aluminium	109.5	50	-	7/8"	3/16"
SGEA51G040502FFG	97.00	SAE B	1" Keyed	Aluminium	109.5	50	-	1"	1/4"
SGEA51G060502G	97.00	SAE C	1.1/4" Keyed	Aluminium	109.5	50	-	1.1/4"	5/16"
SERIES 6									
SGEG60PD08050	409.00	SAE B	13T 16/32" Spline	Cast iron	120	50	37.5	-	-
SGEG60G020702E	409.00	SAE B	7/8" Keyed	Cast iron	120	70	60	7/8"	3/16"
SGEG60PD08070	409.00	SAE B	13T 16/32" Spline	Cast iron	120	60	48	-	-
SGEG60G060652G	376.00	SAE B	1.1/4" Keyed	Cast iron	120	65.5	55	1.1/4"	1/4"
SGEG60PD02065	409.00	SAE C	14T 12/24" Spline	Cast iron	120	65	52.5	-	-
SGEG60PD02050	409.00	SAE C	14T 12/24" Spline	Cast iron	120	50	37.5	-	-

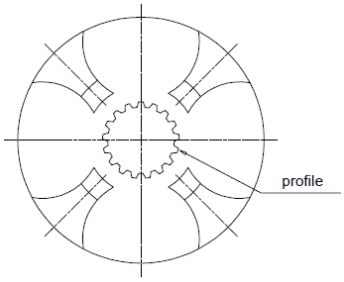

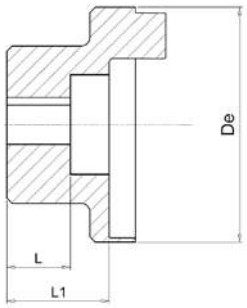

Motor Side Couplings

Part #	List Price $	Pump	Shaft Size	Material	Dimension mm				
					De	L	FG	Ø	Key
SERIES 0									
SGEA01M02028FG	22.00	D71	14mm	Aluminium	44	28	M5	14	5
SGEA01C020282HFG	70.00	*	16mm	Aluminium	44	28	M5	16	4
SGEA01M03048FG	28.00	D80	19mm	Aluminium	44	48	M5	19	6
SGEA01M04048FG	28.00	D90	24mm	Aluminium	44	48	M5	24	8
SERIES 2									
SGEA21M03048FG	40.00	D80	19mm	Aluminium	70	48	M6	19	8
SGEA21M04048FG	40.00	D90	24mm	Aluminium	70	48	M6	24	8
SGEA21M05055FG	42.00	D100/112	28mm	Aluminium	70	55	M6	28	8
SERIES 3									
SGEA31M06077FG	86.00	D132	38mm	Aluminium	85	77	M8	38	10
SERIES 4									
NEW SGEG40M05060	242.00	D100/112	28mm	Cast Iron	95	60	M8	28	8
NEW SGEG40M06080	303.00	D132	38mm	Cast Iron	95	80	M8	38	10
NEW SGEG40M07110	264.00	D160	42mm	Cast Iron	95	110	M8	42	12
NEW SGEG40M08110	264.00	D180	48mm	Cast Iron	95	110	M8	48	14
SERIES 5									
SGEA51M07109FG	180.00	D160	42mm	Aluminium	109.5	109	M8	42	12
SGEA51M08109FG	180.00	D180	48mm	Aluminium	109.5	109	M8	48	14
SGEA51M09109FG	183.00	D200	55mm	Aluminium	109.5	109	M8	55	16
SERIES 6									
SGEG60M09110	497.00	D200	55mm	Cast Iron	120	110	M8	55	16
SGEG60M10140	464.00	D225	60mm	Cast Iron	120	120	M8	60	18
SGEG60M11140	530.00	D250	65mm	Cast Iron	120	120	M8	65	18
ENGINE MOUNT									
SGEA01G01050FG	40.00	Engine 3-7HP	3/4"	Aluminium	44	50	M5	3/4"	3/16"
SGEA21G040502FFG	62.00	Engine 9.5-20HP Petrol 7-18HP Diesel	1"	Aluminium	70	50	M5	1"	1/4"
SGEA21L02050FG	62.00	Engine 20-38HP Petrol 23HP Diesel	1.1/8"	Aluminium	70	50	M5	1.1/8"	1/4"
SGEA21D02050FG	62.00	Engine 7-13HP	25mm	Aluminium	70	50	M5	25	8

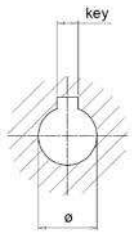

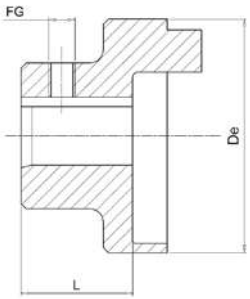

Pilot Bore Couplings

Part #	List Price $	Series	Pilot Bore	Material	Dimension mm		
					De	L	Ø
SGEA0100B050	28.00	0	16.5mm	Aluminium	44	50	16.5
SGEA2100B050	48.00	2	13.5mm	Aluminium	70	50	13.5
SGEA3100A060	64.00	3	15mm	Aluminium	85	60	15
SGEA5100A070	90.00	5	17.5mm	Aluminium	109.5	70	17.5
SGEG60BC	380.00	6	n/a	Cast Iron	120	140	-

Coupling Elements

Part #	List Price $	Series	Outside Ø	Max Torque	Material	Dimension mm		
						E	De	Ø Max
EGE0	8.00	0	38mm	20Nm	Oil-resistant rubber (shore hardness 87)	15	40	16
EGE2	12.00	2	65mm	190Nm	Oil-resistant rubber (shore hardness 87)	18	65	25
EGE3	24.00	3	80mm	380Nm	Oil-resistant rubber (shore hardness 87)	22	80	35
NEW EGE4RR	204.00	4	95mm	760Nm	Polyurethane (shore hardness 92)	24	95	40
EGE5	42.00	5	103.5mm	620Nm	Oil-resistant rubber (shore hardness 87)	26	105	45
EGE5RR	84.00	5	103.5mm	800Nm	Polyurethane (shore hardness 92)	26	105	45
EGE6	188.00	6	120mm	860Nm	Oil-resistant rubber (shore hardness 87)	28	120	55
EGE6RR	232.00	6	120mm	1100Nm	Polyurethane (shore hardness 92)	28	120	55

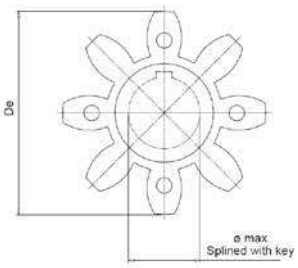

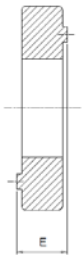

Foot Brackets (Pressure Diecast Aluminium)

Part #	List Price $	Series	Mount	Motor Flange
PDMA160	109.00	D71	135x80 - 8.5mm	B5
PDMA200	125.00	D80-90	175x98 - 11.5mm	B5
PDMA250	150.00	D100-110	220x130 - 13.5mm	B5
PDMA300	231.00	D132	270x160 - 13.5mm	B5
PDMA350	461.00	D160-180	310x200 - 13mm	B5

Damping Rings

Part #	List Price $	Series	Motor Flange	Noise Reduction
ANMA200	351.00	D80-90	B5	Up to 5 db
ANMA250	417.00	D100-110	B5	Up to 5 db
ANMA300	564.00	D132	B5	Up to 5 db
ANMA350	725.00	D160-180	B5	Up to 5 db

Gaskets

Part #	List Price $	Bell Housing	Pump Size
GUMP120	4.00	LMG120	-
GUMP140	6.00	LMG140	-
GUMP160	6.00	LMG160	-
GUMP200	7.00	LMC/LMG200	-
GUMP250	10.00	LMC/LMG250	-
GUMP300	14.00	LMC/LMG300	-
GUMP350	21.00	LMC/LMG350	-
GUPP001	3.00	-	Group 05
GUPP002	3.00	-	DIN Group 1
GUPP004	4.00	-	DIN Group 2
GUPP005	6.00	-	DIN Group 3

60000 Series 10kW - Gearbox

Part #	List Price $	Ratio	Shaft	Group
60001-4	601.00	Step Up Gearbox, 3:1 ratio	Extended male shaft P.T.O 1 3/8" 6T	Group 2 DIN
60002-4	601.00	Step Up Gearbox, 3:1 ratio	Extended female shaft P.T.O 1 3/8" 6T	Group 2 DIN
60004-4	668.00	Step Up Gearbox, 3:1 ratio	Extended female shaft quick release P.T.O 1 3/8" 6T	Group 2 DIN

60000 Series 10kW - Coupling

Part #	List Price $	Length	Teeth	Spline (DIN 5482B)	Group	Shaft Cone	Shaft Keyway	Material
10005	24.00	22mm	14	25 x 22	Group 2 DIN	1:8 Taper	3.2mm	Steel
10026	24.00	22.5mm	14	25 x 22	Group 2 DIN	1:8 Taper	4.0mm (Vivoil)	Steel

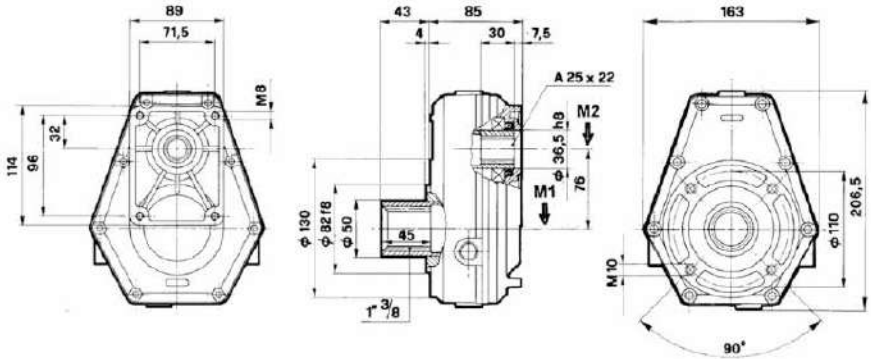

71000 Series 20kW - Gearbox

Part #	List Price $	Ratio	Shaft	Group
71001-4	812.00	Step Up Gearbox, 3:1 ratio	Extended male shaft P.T.O 1 3/8" 6T	Group 2 & 3 DIN
71002-4	812.00	Step Up Gearbox, 3:1 ratio	Extended female shaft P.T.O 1 3/8" 6T	Group 2 & 3 DIN
71004-4	910.00	Step Up Gearbox, 3:1 ratio	Extended female shaft quick release P.T.O 1 3/8" 6T	Group 2 & 3 DIN
96100	242.00	Adaptor Plate 71000 series to SAE A mount		
96101	309.00	Adaptor Plate 71000 series to SAE B mount		
19071	85.00	Seal kit		

71000 Series 20kW - Coupling

Part #	List Price $	Length	Teeth	Spline (DIN 5482B)	Group	Shaft Cone	Shaft Keyway	Material
10012	29.00	22 mm	18	35 x 31	Group 2 DIN	1:8 Taper	3.2mm	Steel
10014	29.00	26 mm	18	35 x 31	Group 3 DIN	1:8 Taper	4.0mm (Vivoil)	Steel
10044	31.00	22.5 mm	18	35 x 31	Group 2 DIN	1:8 Taper	4.0mm (Vivoil)	Steel
15002	90.00	48 mm	18	35 x 31	SAE B	7/8" Keyed	4.8mm / 6.4mm	Steel
35513	120.00	45 mm	18	35 x 31	SAE A	5/8" Spline 9T 16/32" DP	-	Steel
35501	90.00	35 mm	18	35 x 31	SAE B	7/8" Spline 13T 16/32" DP	-	Steel

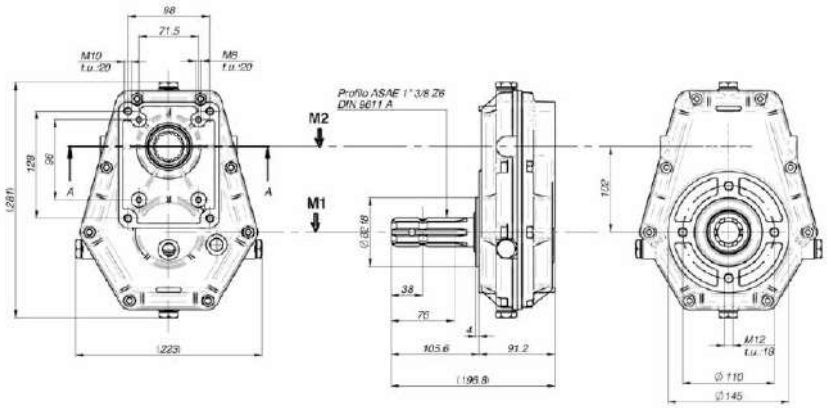

70000 Series 37kW - Gearbox

Part #	List Price $	Ratio	Shaft	Group	Material
70012-4	**1782.00**	Step Up Gearbox, 1:3 ratio	Male shaft P.T.O 1 3/8" 6T	Group 2 & 3 DIN	Cast iron
70013-4	**1782.00**	Step Up Gearbox, 1:3 ratio	Female shaft P.T.O 1 3/8" 6T	Group 2 & 3 DIN	Cast iron
70015-4	**1855.00**	Step Up Gearbox, 1:3 ratio	Female shaft quick release P.T.O 1 3/8" 6T	Group 2 & 3 DIN	Cast iron
96100	**242.00**	Adaptor Plate 71000 series to SAE A mount			
96101	**309.00**	Adaptor Plate 71000 series to SAE B mount			
19071	**85.00**	Seal kit			

70000 Series 37kW - Coupling

Part #	List Price $	Length	Teeth	Spline (DIN 5482B)	Group	Shaft Cone	Shaft Keyway	Material
10012	**29.00**	22 mm	18	35 x 31	Group 2 DIN	1:8 Taper	3.2mm	Steel
10014	**29.00**	26 mm	18	35 x 31	Group 3 DIN	1:8 Taper	4.0mm (Vivoil)	Steel
10044	**31.00**	22.5 mm	18	35 x 31	Group 2 DIN	1:8 Taper	4.0mm (Vivoil)	Steel
15002	**90.00**	48 mm	18	35 x 31	SAE B	7/8" Keyed	4.8mm / 6.4mm	Steel
35513	**120.00**	45 mm	18	35 x 31	SAE A	5/8" Spline 9T 16/32" DP	-	Steel
35501	**90.00**	35 mm	18	35 x 31	SAE B	7/8" Spline 13T 16/32" DP	-	Steel

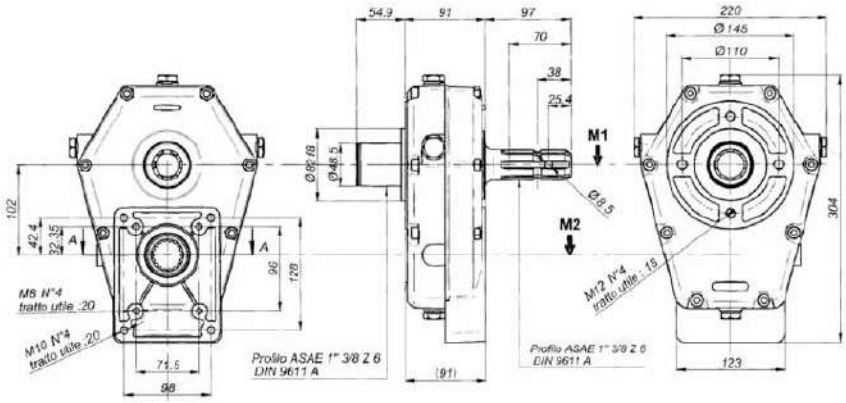

97600 Series 68kW - Gearbox

Part #	List Price $	Ratio	Shaft	Input Shaft	Group	Material
97601-7/13	**2728.00**	Step Up Gearbox, 3.8:1 ratio	Male shaft P.T.O 1 3/8" 6T	7/8" spline 13T 16/32" DP	SAE B	Cast iron

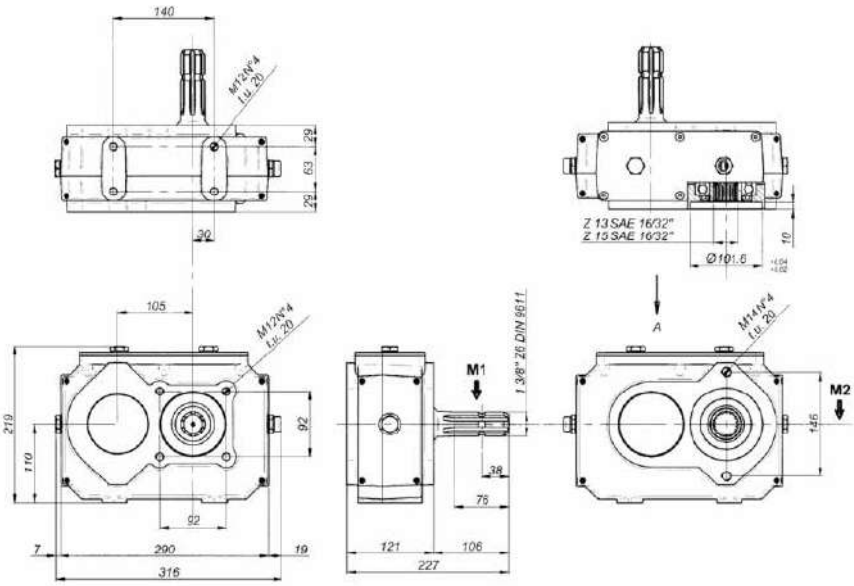

Electro-Magnetic Clutches

Part #	List Price $	Voltage	Amp Draw	Maximum Speed	Pump Mount
30901	**1546.00**	12v DC	3.33a	5000 rpm	Group 1 & 2 DIN
30903	**1546.00**	24v DC	1.26a	5000 rpm	Group 1 & 2 DIN

Electro-Magnetic Clutch Couplings

Part #	List Price $	Length	Teeth	Outer Profile (DIN 5482B)	Group	Shaft Cone	Shaft Keyway	Material
10010	**53.00**	14.5mm	18	35 x 31	Group 1 DIN	1:8 Taper	2.4mm	Steel
10012	**29.00**	22.0mm	18	35 x 31	Group 2 DIN	1:8 Taper	3.17mm	Steel
10044	**31.00**	22.5mm	18	35 x 31	Group 2 DIN	1:8 Taper	4mm (Vivoil)	Steel
10014	**29.00**	26.0mm	18	35 x 31	Group 3 DIN	1:8 Taper	4mm	Steel

Torque Settings

Nominal	Static	Dynamic					
		500 rpm	1000 rpm	1500 rpm	2000 rpm	2500 rpm	3000 rpm
7.8 daNm	12.5 daNm	8.5 daNm	7.0 daNm	4.2 daNm	3.5 daNm	2.7 daNm	2.5 daNm

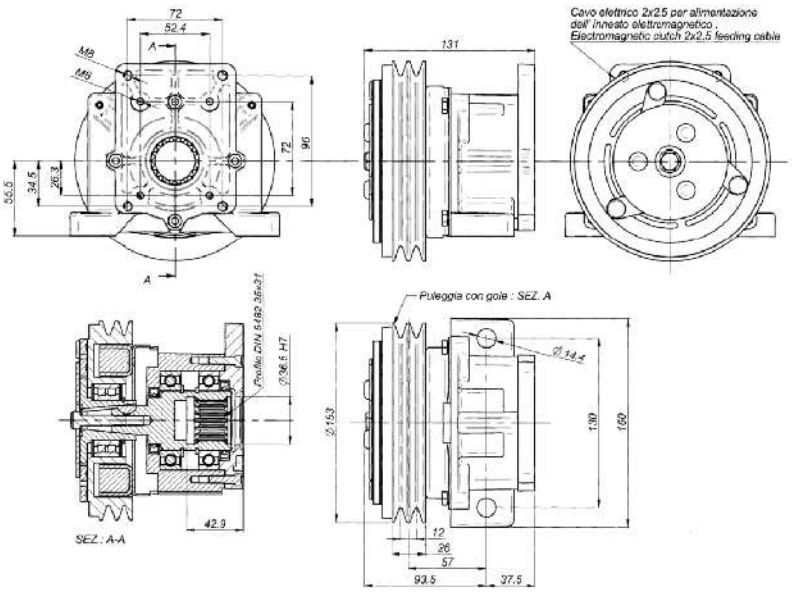

Rubber Vibration Absorbers

Part #	List Price $	Description	Material	Weight	Dimensions mm			
					M	A	B	C
MDGQ403008IIK	**32.00**	40x40x30 M8	Zinc coated steel & natural rubber	0.127kg	M8 x 10	40	30	20
MDGQ504510IIK	**62.00**	50x50x45 M10	Zinc coated steel & natural rubber	0.280kg	M10 x 12	50	45	25
MDGQ755512IIK	**148.00**	75x75x55 M12	Zinc coated steel & natural rubber	0.659kg	M12 x15	75	55	37.5
MDGQ1007516IIK	**452.00**	100x100x75 M16	Zinc coated steel & natural rubber	1.920kg	M16 x 16.5	100	75	50

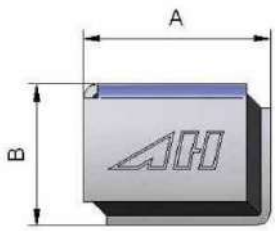

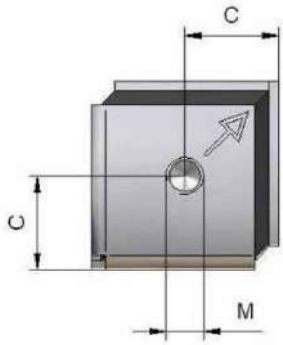

Bearing Mounts

Part #	List Price $	Splined Coupling (DIN 5482B)	Pump Group	Shaft Ø	Shaft Keyway	Shaft Load Radial Maximum	Material
25601	**304.00**	14T 25x22	Group 1	18mm	4.0mm	100 daNm	Aluminium
25603	**370.00**	15T 28x25	Group 2	22mm	6.0mm	285 daNm	Aluminium
25604-4	**801.00**	18T 35x31	Group 3	24mm	8.0mm	318 da Nm	Aluminium

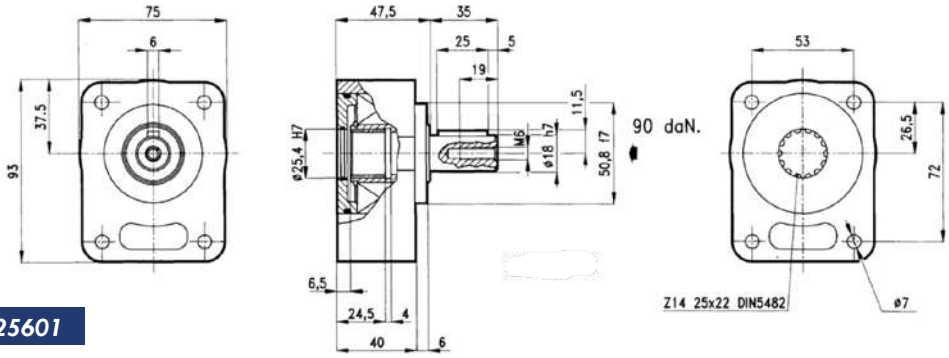

25601

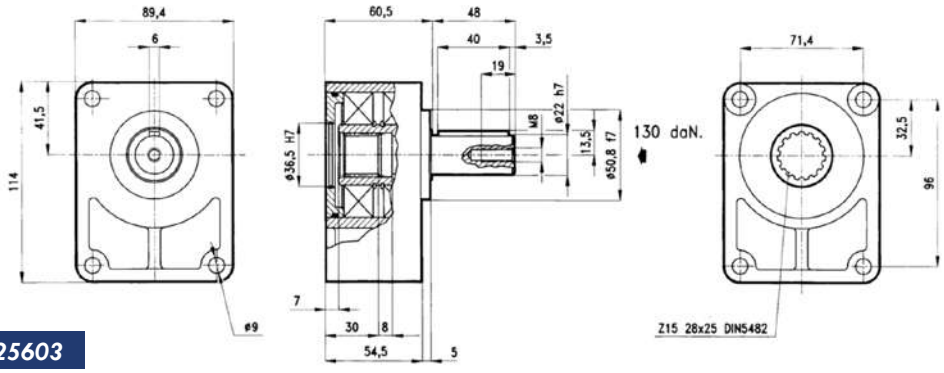

25603

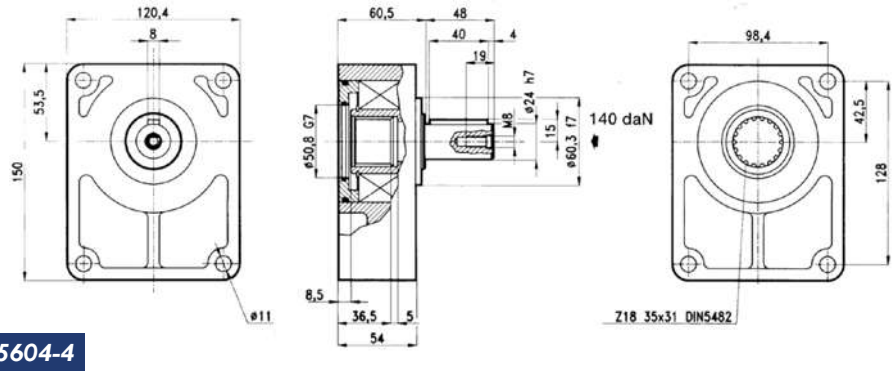

25604-4

Bearing Mount Couplings

Part #	List Price $	Length	Teeth	Spline (DIN 5482B)	Group	Shaft Cone	Shaft Keyway	Material
10003	**28.00**	14.5 mm	14	25 x 22	Group 1 DIN	1:8 Taper	2.4mm	Steel
10033	**28.00**	22.5 mm	14	25 x 22	Group 2 DIN	1:8 Taper	3.0mm	Steel
10007	**36.00**	22 mm	15	28 x 25	Group 2 DIN	1:8 Taper	3.2mm	Steel
10035	**36.00**	22.5 mm	15	28 x 25	Group 2 DIN	1:8 Taper	4.0mm (Vivoil)	Steel
10014	**29.00**	26 mm	18	35 x 31	Group 3 DIN	1:8 Taper	4.0mm	Steel